NOT FOR CONSTRUCTION

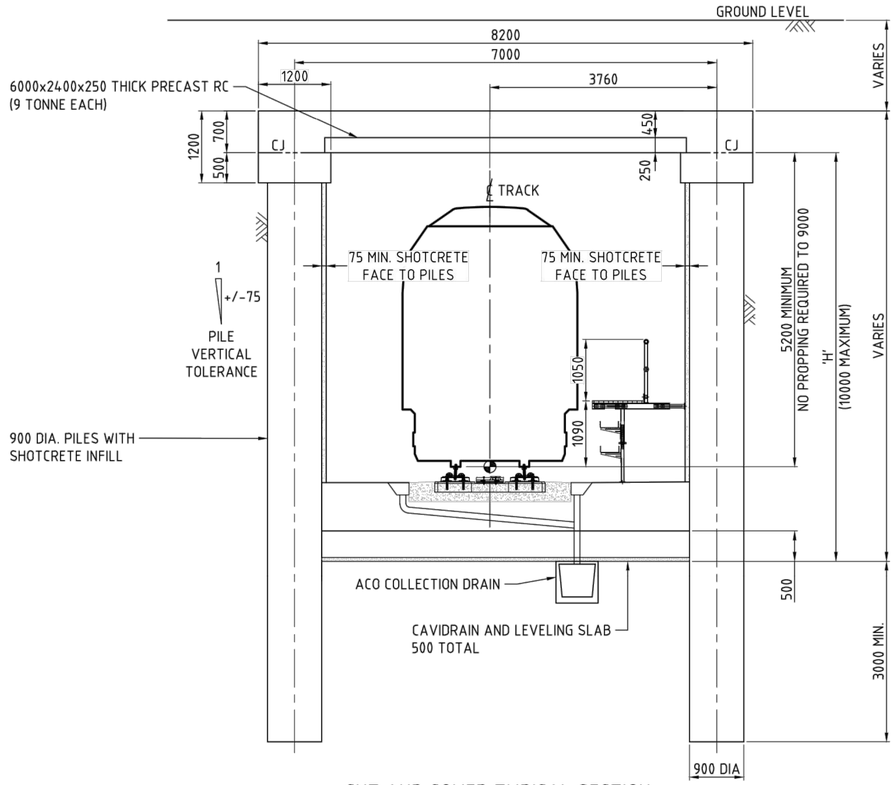

CUT AND COVER TYPICAL SECTION

SCALE 1:50

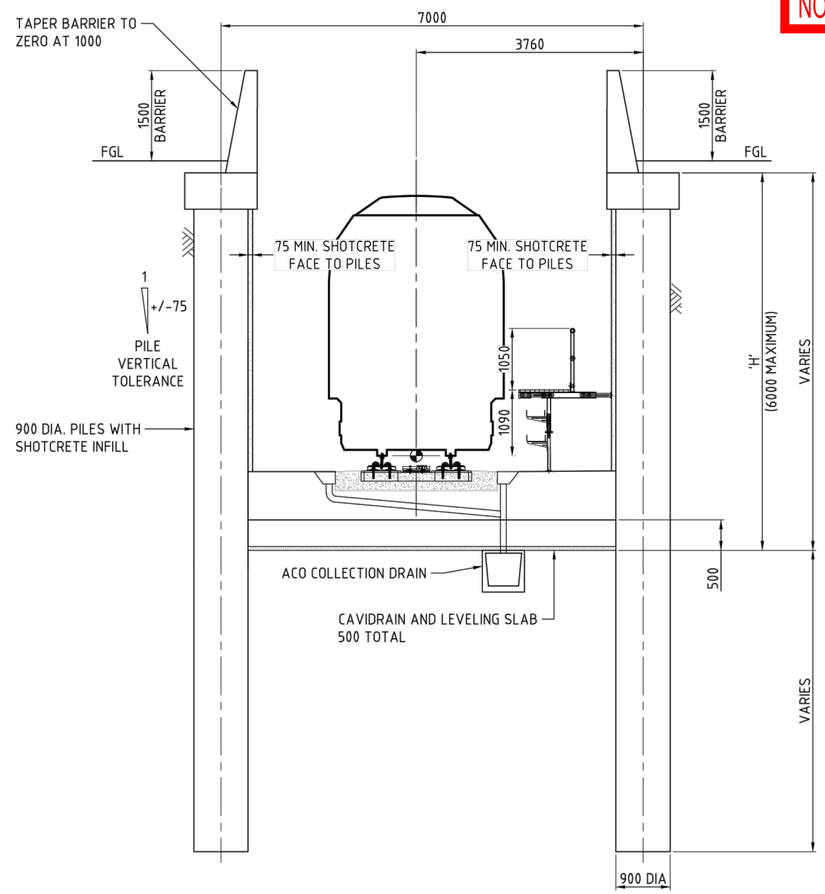

OPEN TROUGH TYPICAL SECTION

SCALE 1:50

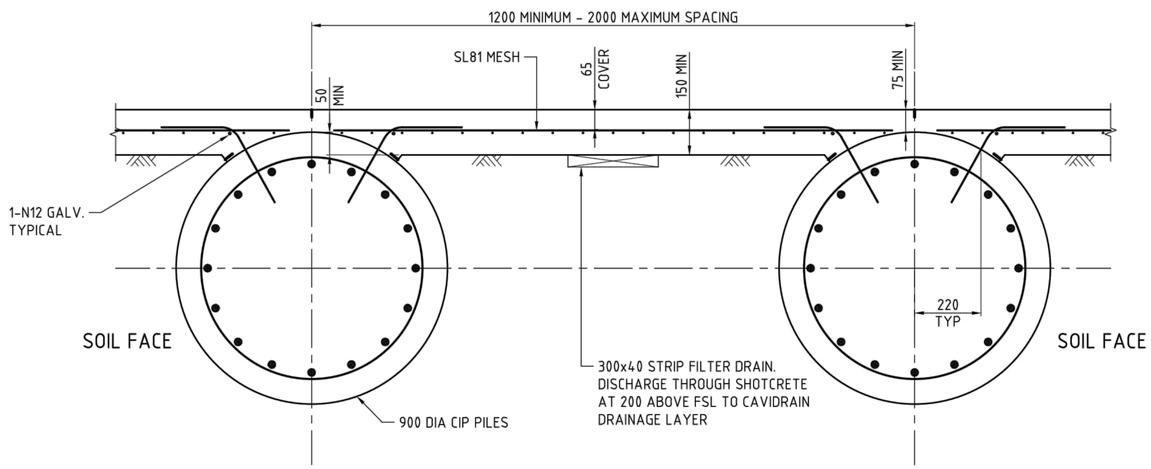

TYPICAL SECTION - PILES AND SHOTCRETE WALL

SCALE 1:10

CRRDA Drg. No. CRR-0003-POR-GA-101

D	RFPC8 ISSUE		24.07.20	
C	RFPC7 ISSUE		08.05.20	
B	MINOR REVISIONS TO RfPC4 ISSUE		29.04.19	
A	RfPC4 ISSUE		24.04.19	
	Revisions/Descriptions	Certification	Date	Microfiled

CAD FILES

Associated Job Nos

Auxiliary Drg Nos

Survey Data	
Datum	BCSG02
Horiz. Grid	
Height Origin	
Survey Books	

Scales

Dimensions shown in Millimetres except where shown otherwise

BRISBANE CITY

CROSS RIVER RAIL

CHANGED PROJECT 8

Reference Points

Preceding RP	Dist. to start of job (km)	From start to end of job	From end to Following RP	Following RP

Through Chainage from

SOUTH PORTAL CUT AND COVER SECTIONS SHEET 1

Drawn

Designed

ENGINEERING CERTIFICATION (RPEQ)

ENG. AREA	NAME	SIGNATURE	NO.	DATE

CROSSRIVERRAIL

Job No.	
Contract. No.	
Drawing No.	D
Series Number	of

MRR_Detail (02/14)

NOT FOR CONSTRUCTION

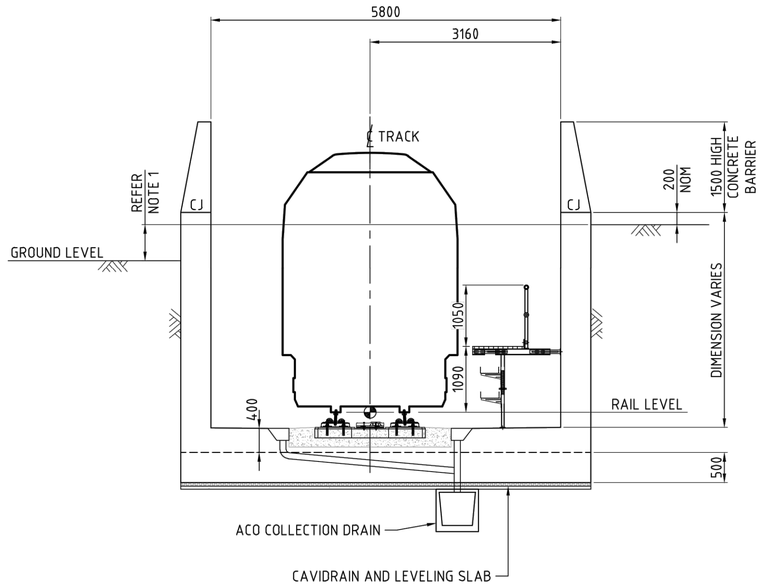

INSITU OPEN TROUGH TYPICAL SECTION

SCALE 1:50

CRRDA Drg. No. CRR-0003-POR-GA-102

D	RFPC8 ISSUE		24.07.20	
C	RFPC7 ISSUE		08.05.20	
B	MINOR REVISIONS TO RfPC4 ISSUE		29.04.19	
A	RfPC4 ISSUE		24.04.19	
	Revisions/Descriptions	Certification	Date	Microfiled

CAD FILES

Associated Job Nos

Auxiliary Drg Nos

Survey Data: Datum BCSG02; Horiz. Grid; Height Origin; Survey Books

Scales

Dimensions shown in Millimetres except where shown otherwise

BRISBANE CITY

CROSS RIVER RAIL

CHANGED PROJECT 8

Reference Points: Preceding RP | Dist. to start of job (km) | From start to end of job | From end to Following RP | Following RP

Through Chainage from

Drawn

Designed

ENGINEERING CERTIFICATION (RPEQ): ENG. AREA | NAME | SIGNATURE | NO. | DATE

SOUTH PORTAL CUT AND COVER SECTIONS SHEET 2

CROSSRIVERRAIL

Job No.

Contract. No.

Drawing No. D

Series Number of

MRR_Detail (02/14)

NOT FOR CONSTRUCTION

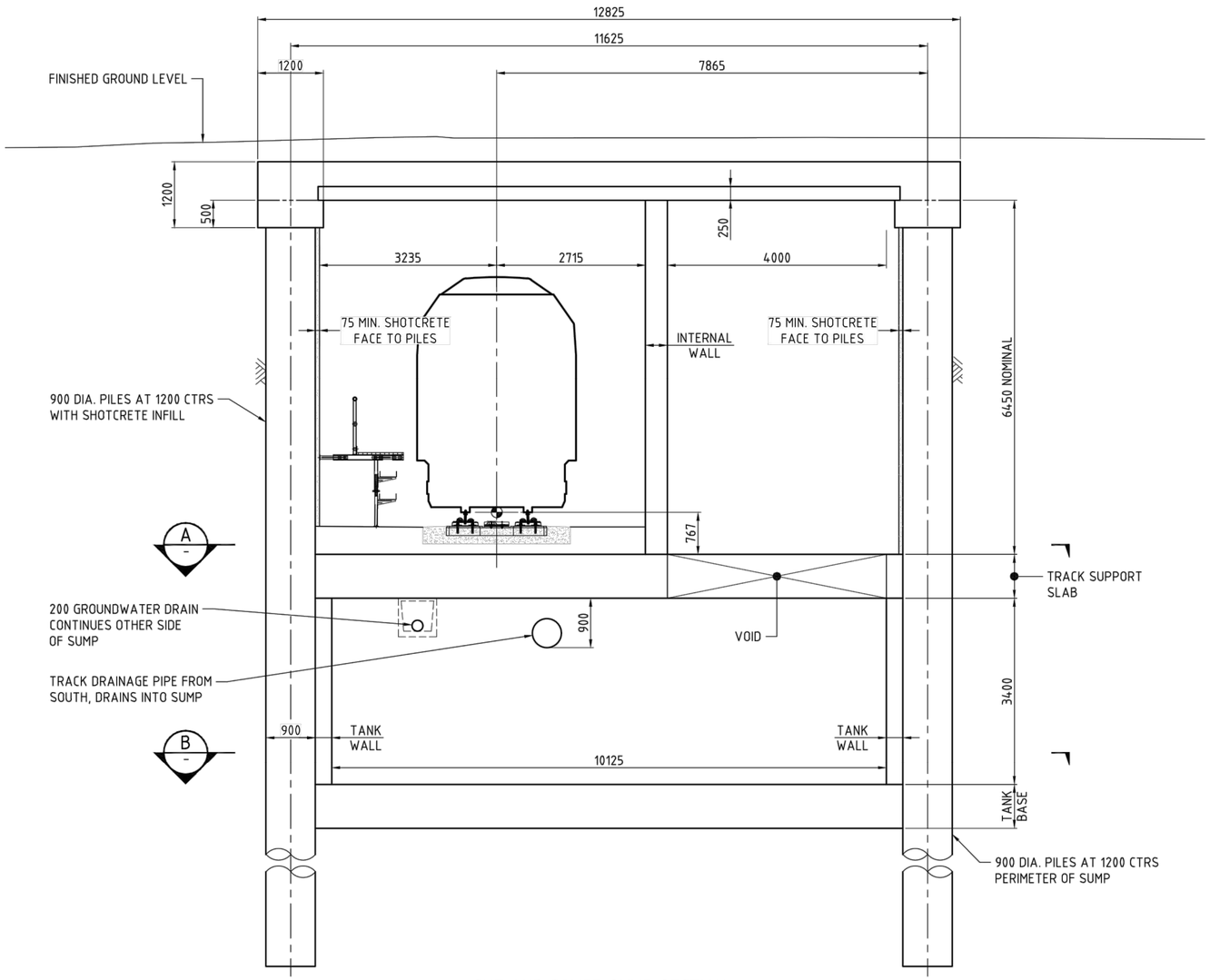

CUT AND COVER SUMP SECTION
SCALE 1:50

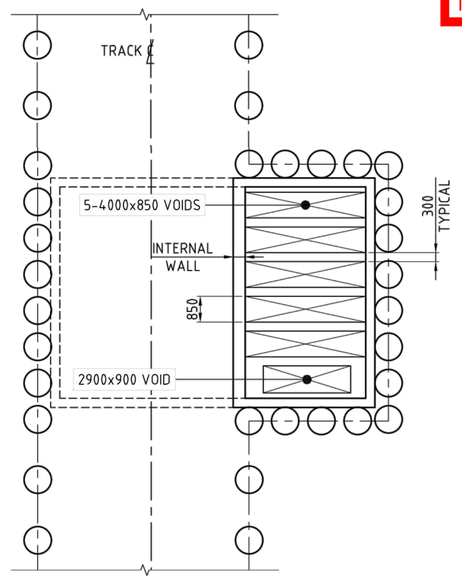

SECTION A
SCALE 1:100

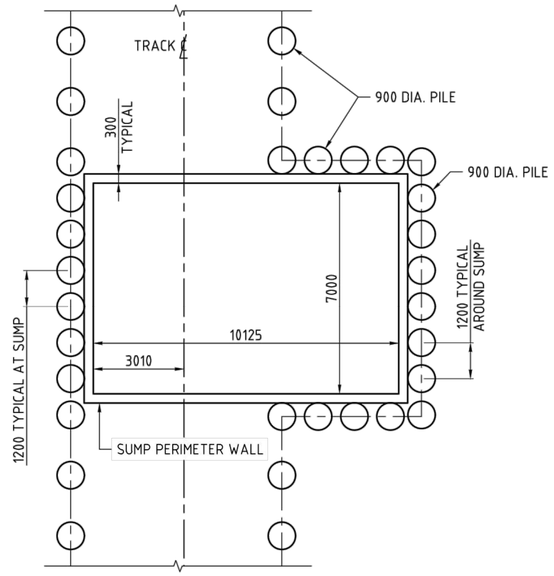

SECTION B
SCALE 1:100

CRRDA Drg. No. CRR-0003-POR-GA-103

D	RFPC8 ISSUE		24.07.20	
C	RFPC7 ISSUE		08.05.20	
B	MINOR REVISIONS TO RfPC4 ISSUE		29.04.19	
A	RfPC4 ISSUE		24.04.19	
	Revisions/Descriptions	Certification	Date	Microfiled

CAD FILES

Associated Job Nos

Auxiliary Drg Nos

Survey Data: Datum BCSG02; Horiz. Grid; Height Origin; Survey Books

Scales

Dimensions shown in Millimetres except where shown otherwise

BRISBANE CITY
CROSS RIVER RAIL
CHANGED PROJECT 8

Reference Points: Preceding RP | Dist. to start of job (km) | From start to end of job | From end to Following RP | Following RP

Through Chainage from

SOUTH PORTAL CUT AND COVER
SECTION SUMP DETAILS

Drawn

Designed

ENGINEERING CERTIFICATION (RPEQ): ENG. AREA | NAME | SIGNATURE | NO. | DATE

CROSSRIVERRAIL

Job No.

Contract. No.

Drawing No. D

Series Number of

MRR_Detail (02/14)

NOT FOR CONSTRUCTION

LEGEND

- STATIC ENVELOPE (INCREASED)
- BASIC KINEMATIC ENVELOPE
- MAXIMUM SWEPT KINEMATIC ENVELOPE
- MAXIMUM SWEPT KINEMATIC ENVELOPE + 150mm

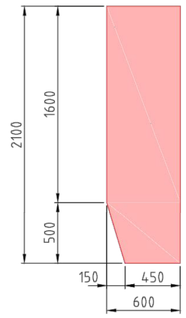

MAINTENANCE ACCESS PROVISION

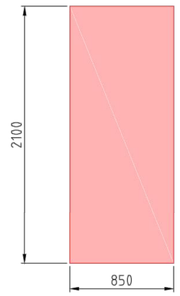

EMERGENCY EGRESS WALKWAY PROVISION

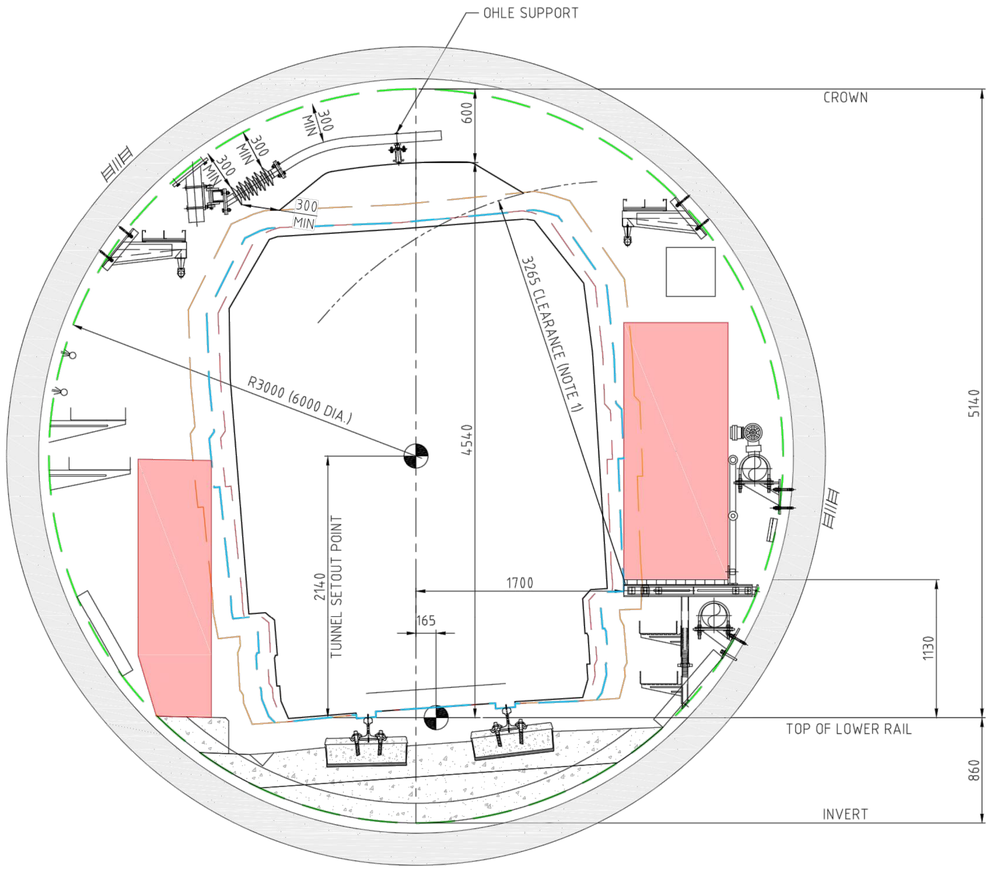

CURVED (LEFT) : 80mm CANT

165mm SHIFT RIGHT

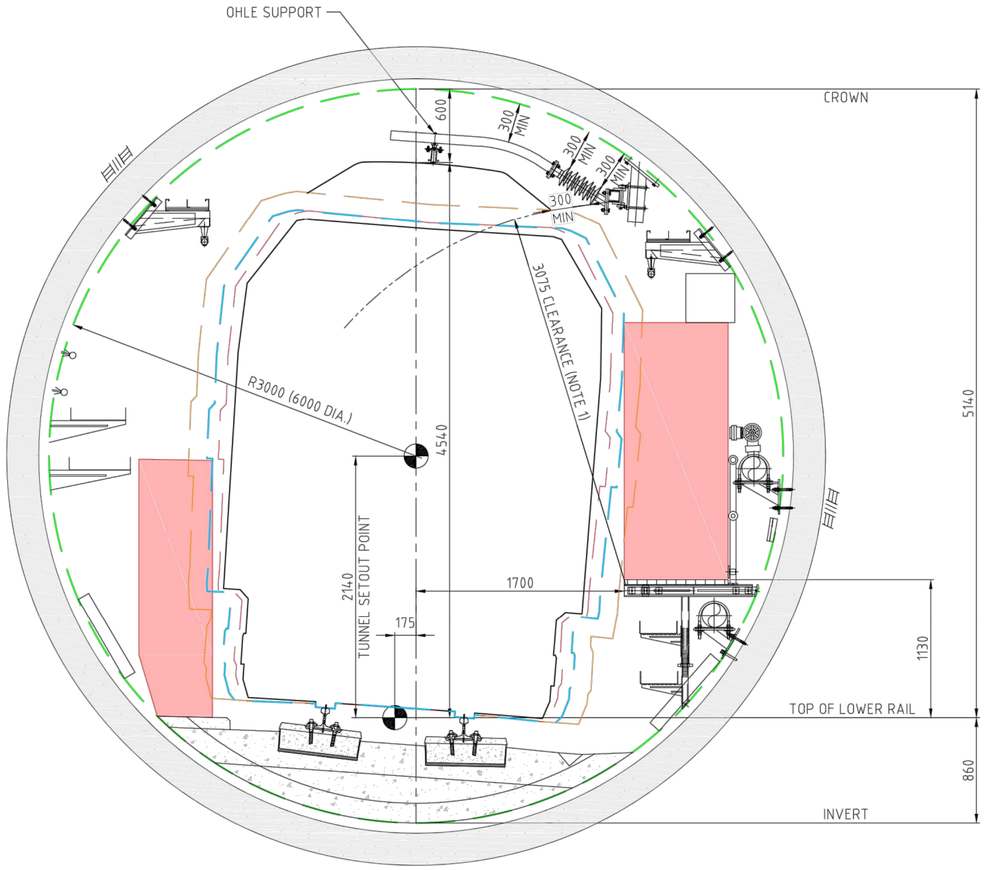

CURVED (RIGHT) : 80mm CANT

175mm SHIFT LEFT

CRRDA Drg. No. CRR-0003-TUN-GA-101

D	RFPC8 ISSUE		24.07.20	
C	RFPC7 ISSUE		08.05.20	
B	MINOR REVISIONS TO RfPC4 ISSUE		29.04.19	
A	RfPC4 ISSUE		24.04.19	
	Revisions/Descriptions	Certification	Date	Microfiled

CAD FILES

Associated Job Nos

Auxiliary Drg Nos

Survey Data: Datum BCSG02; Horiz. Grid; Height Origin; Survey Books

Scales

Dimensions shown in Millimetres except where shown otherwise

BRISBANE CITY
CROSS RIVER RAIL
CHANGED PROJECT 8

Reference Points: Preceding RP | Dist. to start of job (km) | From start to end of job | From end to Following RP | Following RP

Through Chainage from

TUNNEL SPACE PROOFING TBM TUNNEL
CURVED TRACK

Drawn

Designed

ENGINEERING CERTIFICATION (RPEQ): ENG. AREA | NAME | SIGNATURE | NO. | DATE

CROSSRIVERRAIL

Job No.

Contract. No.

Drawing No. D

Series Number of

MRR_Detail (02/14)

NOT FOR CONSTRUCTION

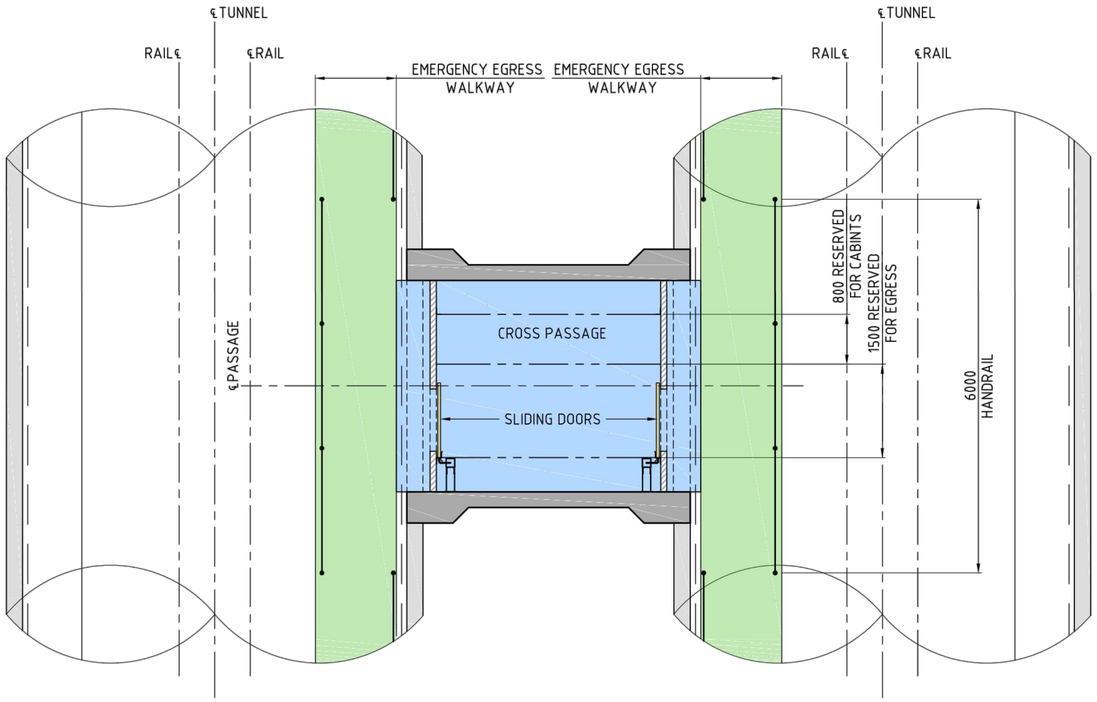

CROSS PASSAGE - PLAN

SECTION A
SCALE 1:50

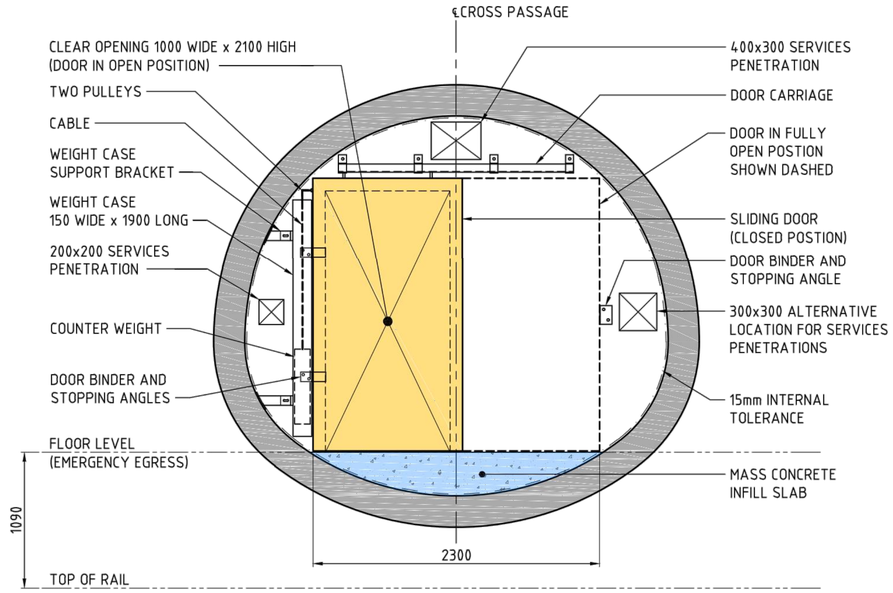

CROSS PASSAGE - CROSS SECTION

SECTION B
SCALE 1:25

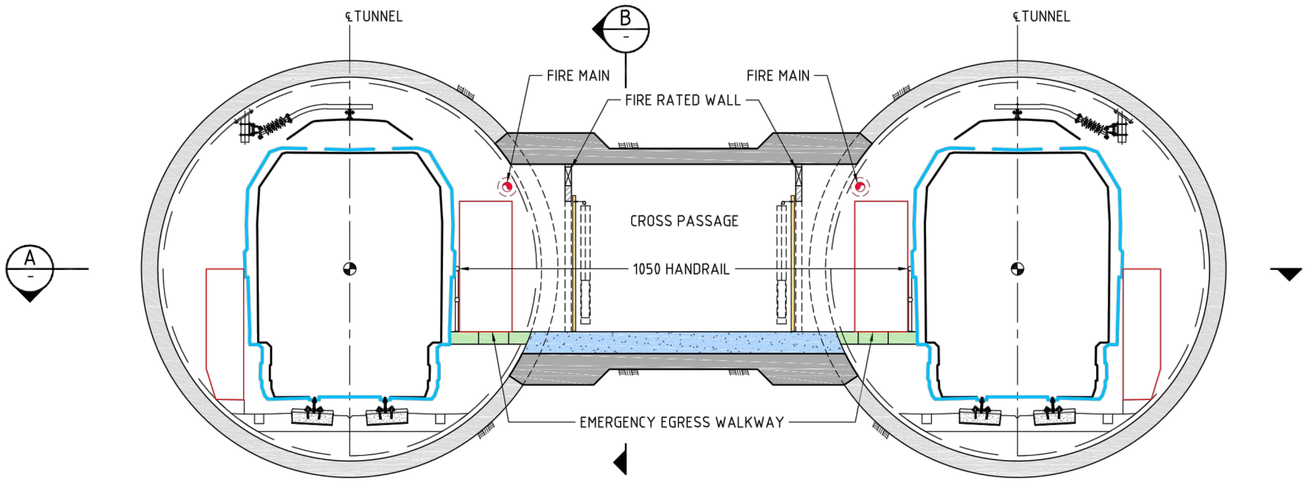

CRRDA Drg. No. CRR-0003-TUN-GA-102

D	RFPC8 ISSUE		24.07.20	
C	RFPC7 ISSUE		08.05.20	
B	MINOR REVISIONS TO RfPC4 ISSUE		29.04.19	
A	RfPC4 ISSUE		24.04.19	
	Revisions/Descriptions	Certification	Date	Microfiled

CAD FILES

Associated Job Nos

Auxiliary Drg Nos

Survey Data: Datum BCSG02; Horiz. Grid; Height Origin; Survey Books

Scales

Dimensions shown in Millimetres except where shown otherwise

BRISBANE CITY
CROSS RIVER RAIL
CHANGED PROJECT 8

Reference Points: Preceding RP | Dist. to start of job (km) | From start to end of job | From end to Following RP | Following RP

Through Chainage from

TUNNEL SPACE PROOFING TBM TUNNEL
CROSS PASSAGE

Drawn

Designed

ENGINEERING CERTIFICATION (RPEQ): ENG. AREA | NAME | SIGNATURE | NO. | DATE

CROSSRIVERRAIL

Job No.

Contract. No.

Drawing No. D

Series Number of

MRR_Detail (02/14)

NOT FOR CONSTRUCTION

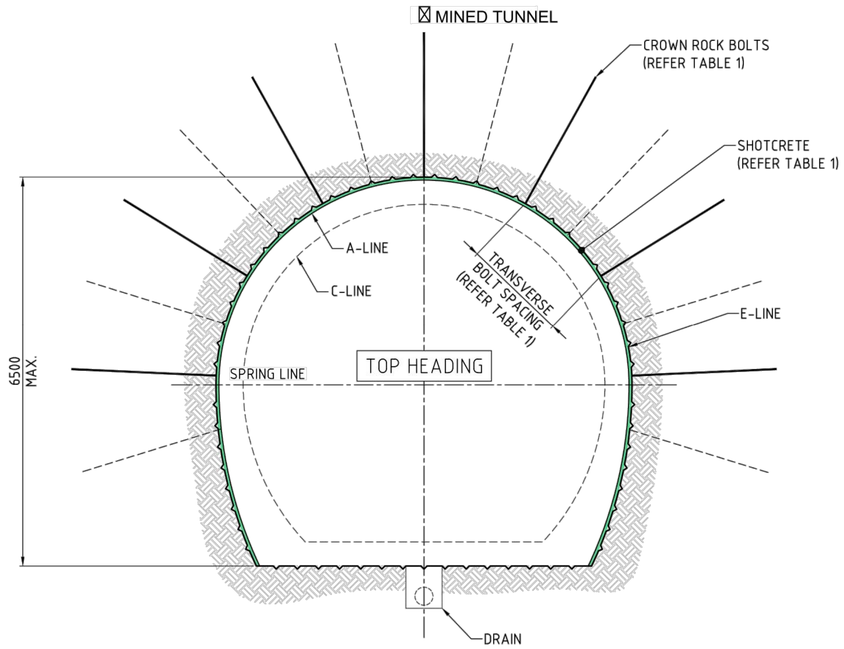

MINED TUNNEL SUPPORT TYPE-T1, T2, T3, AND T5

1 : 50

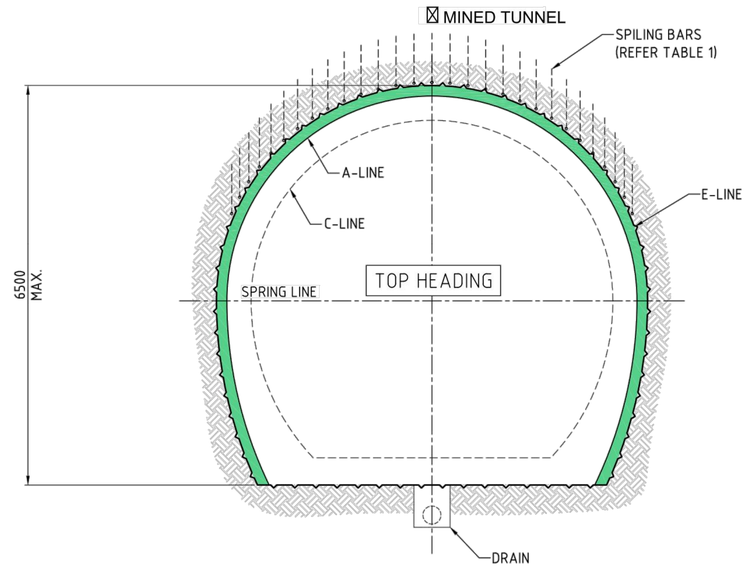

MINED TUNNEL SUPPORT TYPE-T4

1 : 50

TABLE 1: QUANTITIES

PRIMARY SUPPORT TYPE		T1	T2	T3	T4
CROWN SUPPORT	ROCK BOLTS	2400 LONG SWELLEX AT 1750 TRANS. X 1750 LONG. CTS	2400 LONG SWELLEX AT 1500 TRANS. X 1500 LONG. CTS	2400 LONG AT 1250 TRANS. X 1250 LONG. CTS	2400 LONG SPILING BARS
	PRIMARY SHOTCRETE	50 THICK S1	75 THICK S1	100 THICK S1	300 THICK S1
FACE SUPPORT	DOWELS	AS REQUIRED	AS REQUIRED	AS REQUIRED	AS REQUIRED
	SHOTCRETE	AS REQUIRED	AS REQUIRED	AS REQUIRED	AS REQUIRED

CRRDA Drg. No. CRR-0003-TUN-GA-110

D	RFPC8 ISSUE		24.07.20	
C	RFPC7 ISSUE		08.05.20	
B	MINOR REVISIONS TO RfPC4 ISSUE		29.04.19	
A	RfPC4 ISSUE		24.04.19	
	Revisions/Descriptions	Certification	Date	Microfiled

CAD FILES

Associated Job Nos

Auxiliary Drg Nos

Survey Data: Datum BCSG02; Horiz. Grid; Height Origin; Survey Books

Scales

Dimensions shown in Millimetres except where shown otherwise

BRISBANE CITY

CROSS RIVER RAIL

CHANGED PROJECT 8

Reference Points: Preceding RP | Dist. to start of job (km) | From start to end of job | From end to Following RP | Following RP

Through Chainage from

TUNNEL MINED
TUNNEL SUPPORT TYPES

Drawn

Designed

ENGINEERING CERTIFICATION (RPEQ): ENG. AREA | NAME | SIGNATURE | NO. | DATE

CROSSRIVERRAIL

Job No.

Contract. No.

Drawing No. D

Series Number of

MRR_Detail (02/14)

NOT FOR CONSTRUCTION

LEGEND:

SETOUT POINT

WATERPROOF MEMBRANE

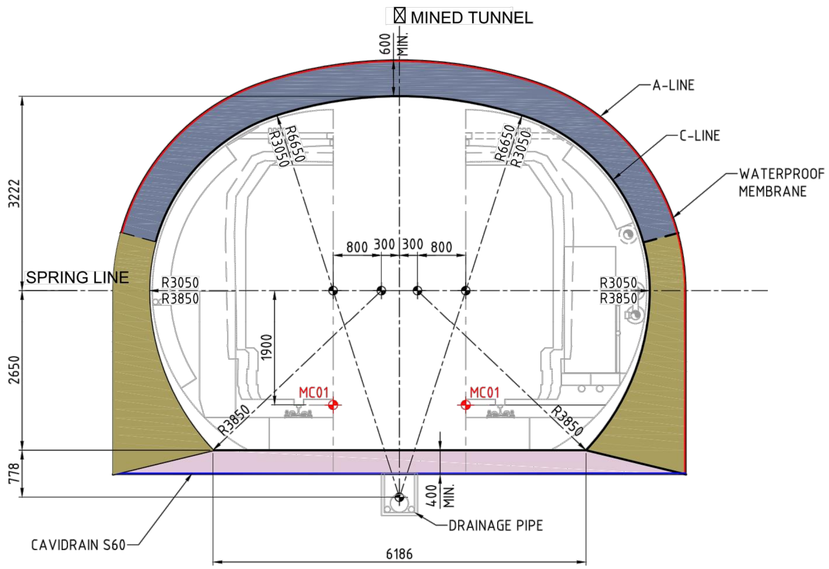

SOUTHERN MINED TUNNEL C-LINE SETOUT - (MC01)

1 : 50

SECTION A 021100

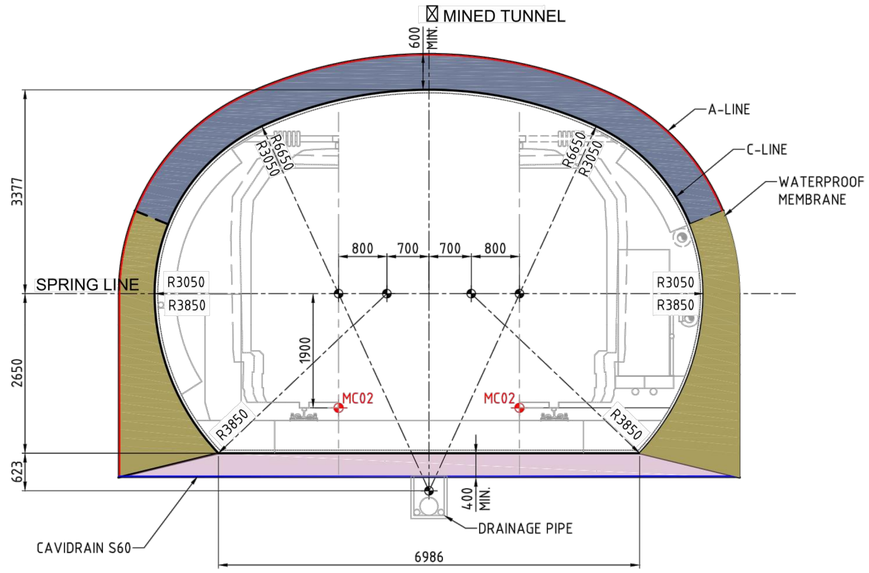

SOUTHERN MINED TUNNEL C-LINE SETOUT - (MC02)

1 : 50

SECTION B 021100

CRRDA Drg. No. CRR-0003-TUN-GA-111

D	RFPC8 ISSUE		24.07.20	
C	RFPC7 ISSUE		08.05.20	
B	MINOR REVISIONS TO RfPC4 ISSUE		29.04.19	
A	RfPC4 ISSUE		24.04.19	
	Revisions/Descriptions	Certification	Date	Microfiled

CAD FILES

Associated Job Nos

Auxiliary Drg Nos

Survey Data: Datum BCSG02; Horiz. Grid; Height Origin; Survey Books

Scales

Dimensions shown in Millimetres except where shown otherwise

BRISBANE CITY

CROSS RIVER RAIL

CHANGED PROJECT 8

Reference Points: Preceding RP | Dist. to start of job (km) | From start to end of job | From end to Following RP | Following RP

Through Chainage from

TUNNEL MINED

TUNNEL C-LINE SETOUT

SHEET 1

Drawn

Designed

ENGINEERING CERTIFICATION (RPEQ): ENG. AREA | NAME | SIGNATURE | NO. | DATE

CROSSRIVERRAIL

Job No.

Contract. No.

Drawing No. D

Series Number of

MRR_Detail (02/14)

NOT FOR CONSTRUCTION

NOTES:

1. FOR GENERAL NOTES REFER TO DRAWING 200005.

LEGEND:

SETOUT POINT

WATERPROOF MEMBRANE

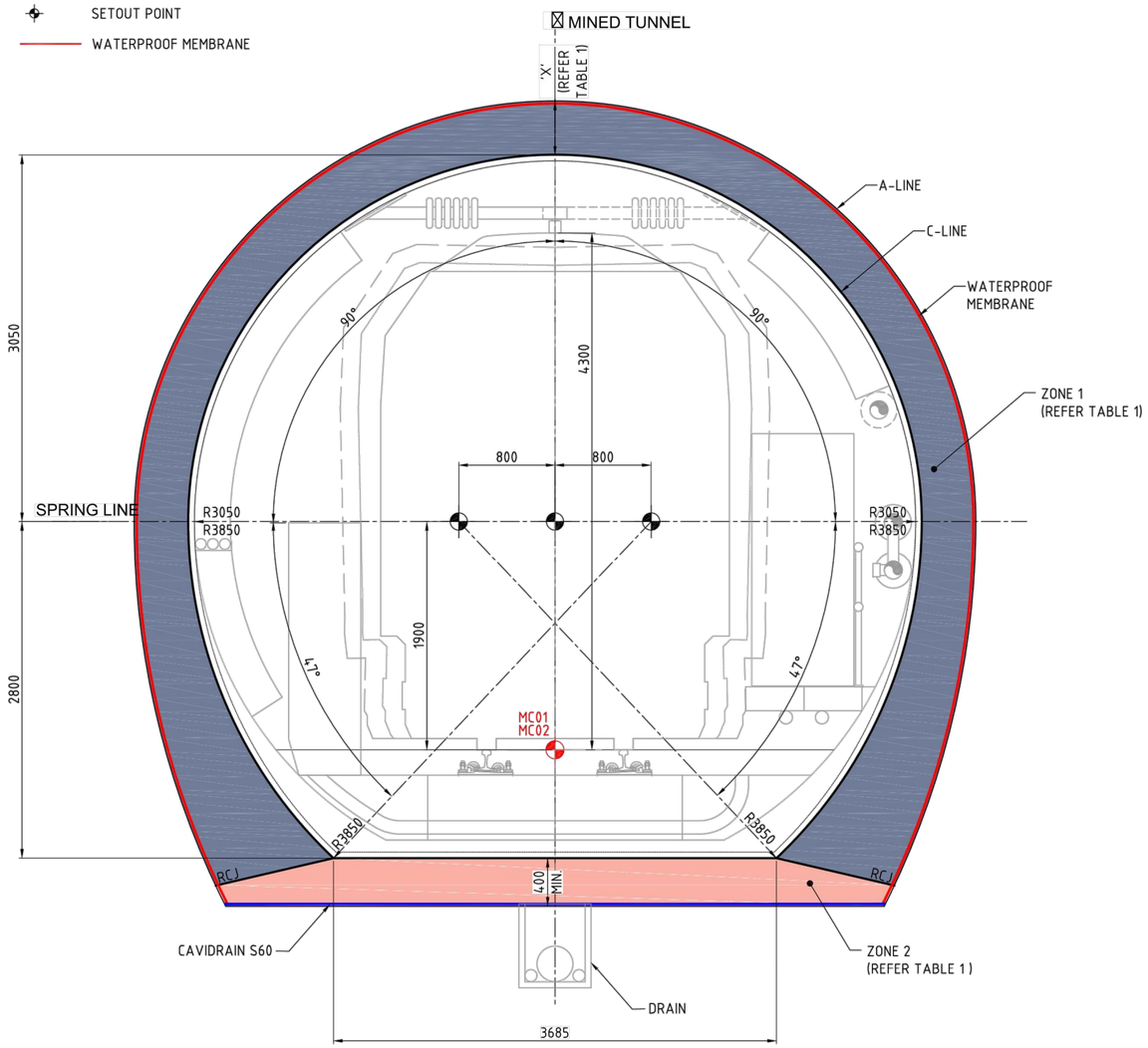

STANDARD NORTHERN MINED TUNNEL - TS1 AND TS2 - C-LINE SETOUT

SECTION C
SCALE 1:25 021101 - 021107

TABLE 1:

PROFILE	'X'	ZONE	TYPE
TS1	350	1	SFRC
		2	RC
TS2	450	1	RC
		2	RC

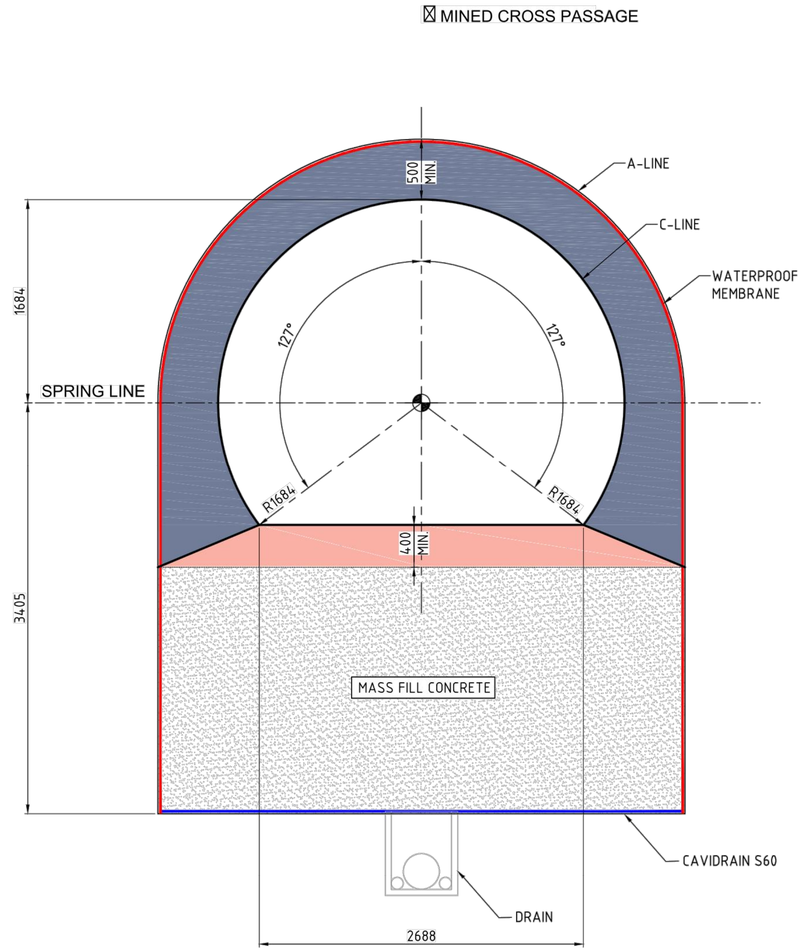

MINED TUNNEL - CROSS PASSAGE - C-LINE SETOUT

SECTION D
SCALE 1:20 021102 021104 021105

CRRDA Drg. No. CRR-0003-TUN-GA-112

D	RFPC8 ISSUE		24.07.20	
C	RFPC7 ISSUE		08.05.20	
B	MINOR REVISIONS TO RfPC4 ISSUE		29.04.19	
A	RfPC4 ISSUE		24.04.19	
	Revisions/Descriptions	Certification	Date	Microfiled

CAD FILES

Associated Job Nos

Auxiliary Drg Nos

Survey Data: Datum BCSG02; Horiz. Grid; Height Origin; Survey Books

Scales

Dimensions shown in Millimetres except where shown otherwise

BRISBANE CITY
CROSS RIVER RAIL
CHANGED PROJECT 8

Reference Points: Preceding RP | Dist. to start of job (km) | From start to end of job | From end to Following RP | Following RP

Through Chainage from

TUNNEL MINED
TUNNEL C-LINE SETOUT
SHEET 2

Drawn

Designed

ENGINEERING CERTIFICATION (RPEQ): ENG. AREA | NAME | SIGNATURE | NO. | DATE

CROSSRIVERRAIL

Job No.

Contract. No.

Drawing No. D

Series Number of

MRR_Detail (02/14)

NOT FOR CONSTRUCTION

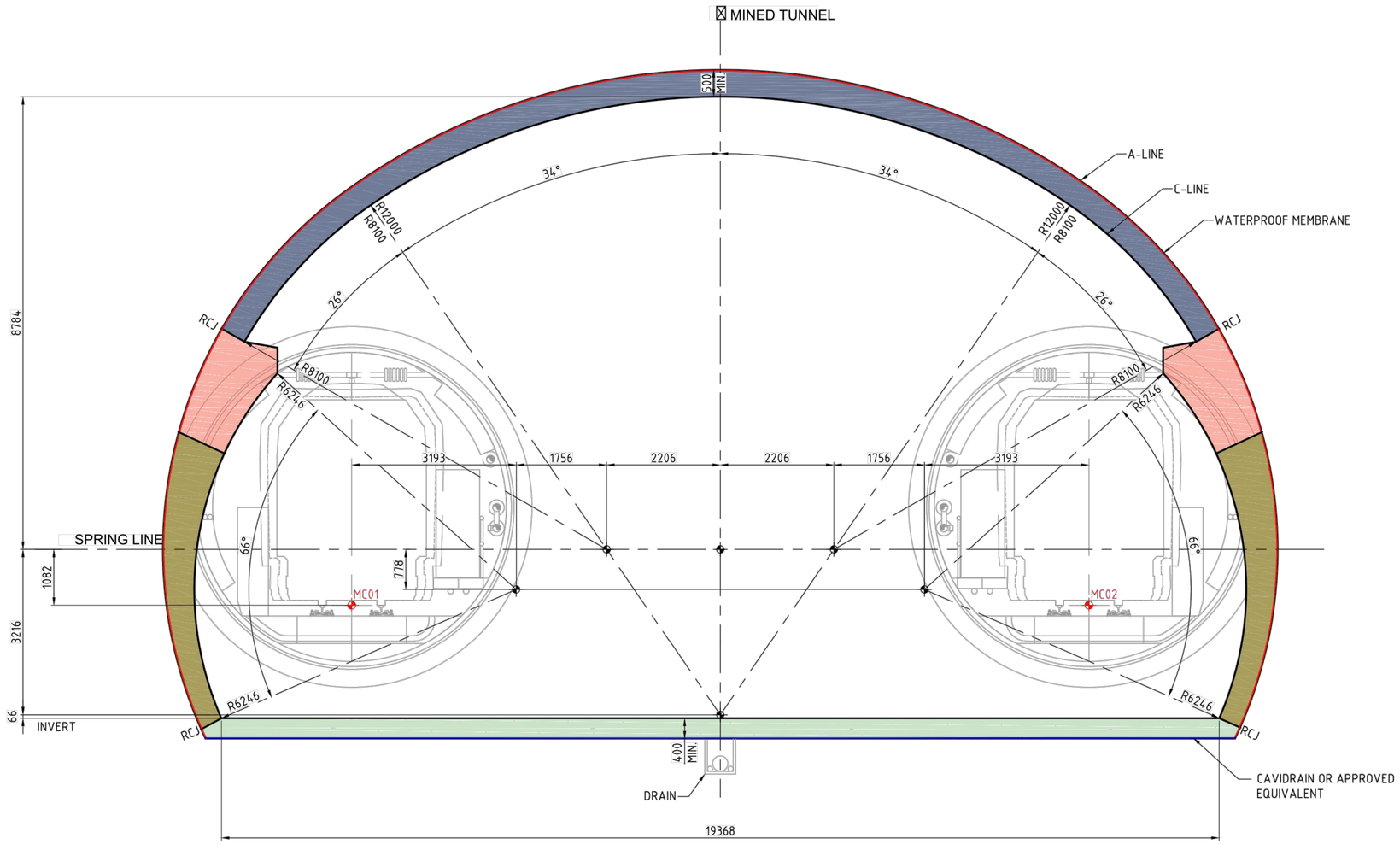

SECTION A 023100
SCALE 1:50

LOWERED CAVERN - BL1- C-LINE SETOUT

CRRDA Drg. No. CRR-0003-TUN-GA-120

D	RFPC8 ISSUE		24.07.20	
C	RFPC7 ISSUE		08.05.20	
B	MINOR REVISIONS TO RfPC4 ISSUE		29.04.19	
A	RfPC4 ISSUE		24.04.19	
	Revisions/Descriptions	Certification	Date	Microfiled

CAD FILES

Associated Job Nos

Auxiliary Drg Nos

Survey Data: Datum BCSG02; Horiz. Grid; Height Origin; Survey Books

Scales

Dimensions shown in Millimetres except where shown otherwise

BRISBANE CITY
CROSS RIVER RAIL
CHANGED PROJECT 8

Reference Points: Preceding RP | Dist. to start of job (km) | From start to end of job | From end to Following RP | Following RP

Through Chainage from

BOGGO ROAD STATION AND PRECINCT
STATION CAVERN C-LINE SETOUT
LOWERED CAVERN

Drawn

Designed

ENGINEERING CERTIFICATION (RPEQ): ENG. AREA | NAME | SIGNATURE | NO. | DATE

CROSSRIVERRAIL

Job No.

Contract No.

Drawing No. D

Series Number of

MRR_Detail (02/14)

NOT FOR CONSTRUCTION

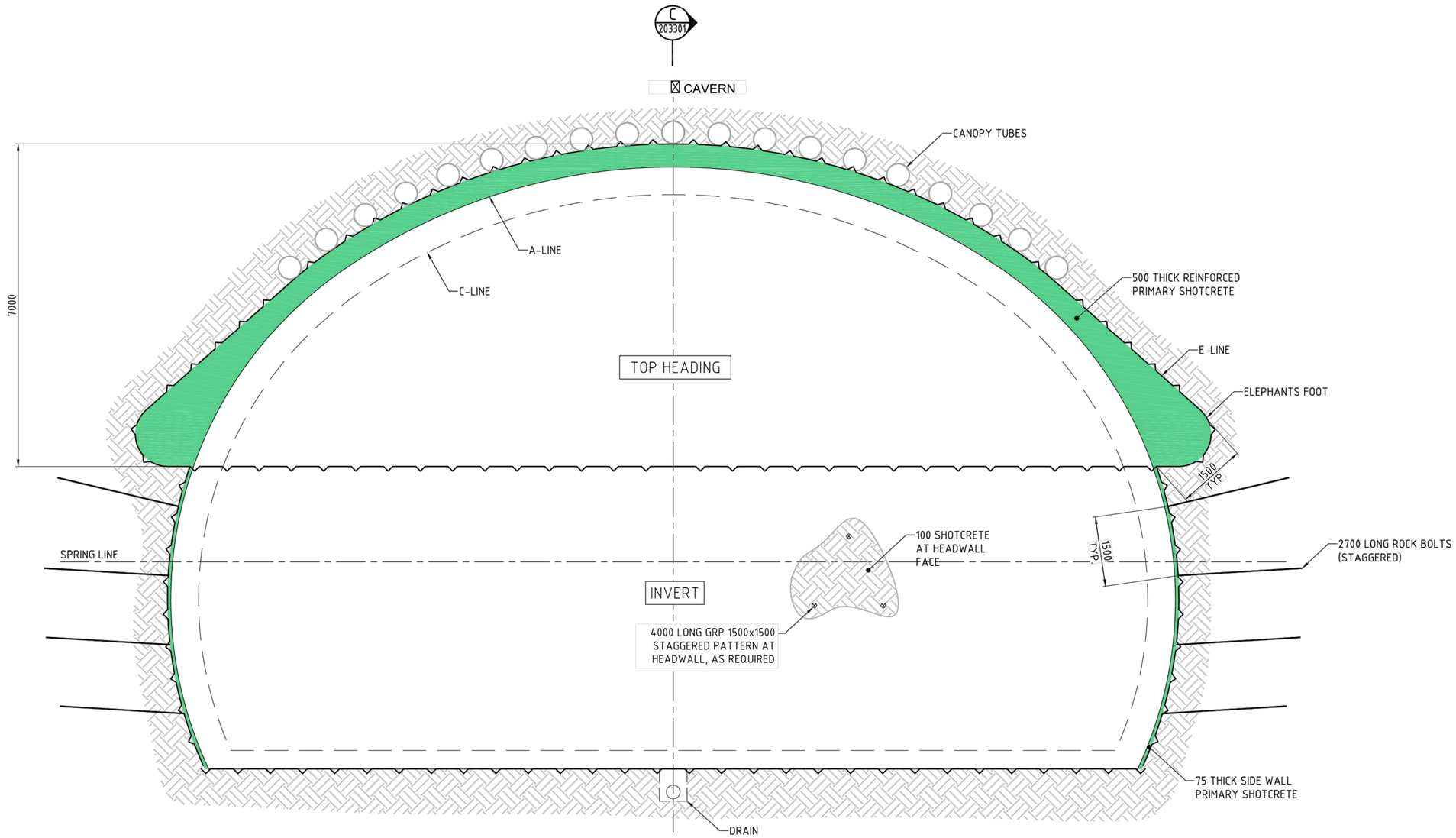

LOWERED CAVERN SUPPORT TYPE-BL1

1 : 50

CRRDA Drg. No. CRR-0003-TUN-GA-121

D	RFPC8 ISSUE		24.07.20	
C	RFPC7 ISSUE		08.05.20	
B	MINOR REVISIONS TO RfPC4 ISSUE		29.04.19	
A	RfPC4 ISSUE		24.04.19	
	Revisions/Descriptions	Certification	Date	Microfiled

CAD FILES

Associated Job Nos

Auxiliary Drg Nos

Survey Data: Datum BCSG02; Horiz. Grid; Height Origin; Survey Books

Scales

Dimensions shown in Millimetres except where shown otherwise

BRISBANE CITY
CROSS RIVER RAIL
CHANGED PROJECT 8

Reference Points: Preceding RP | Dist. to start of job (km) | From start to end of job | From end to Following RP | Following RP

Through Chainage from

BOGGO ROAD STATION AND PRECINCT
STATION CAVERN
LOWERED CAVERN SUPPORT TYPE

Drawn

Designed

ENGINEERING CERTIFICATION (RPEQ): ENG. AREA | NAME | SIGNATURE | NO. | DATE

CROSSRIVERRAIL

Job No.

Contract. No.

Drawing No. D

Series Number of

MRR_Detail (02/14)

NOT FOR CONSTRUCTION

LEGEND:

SETOUT POINT

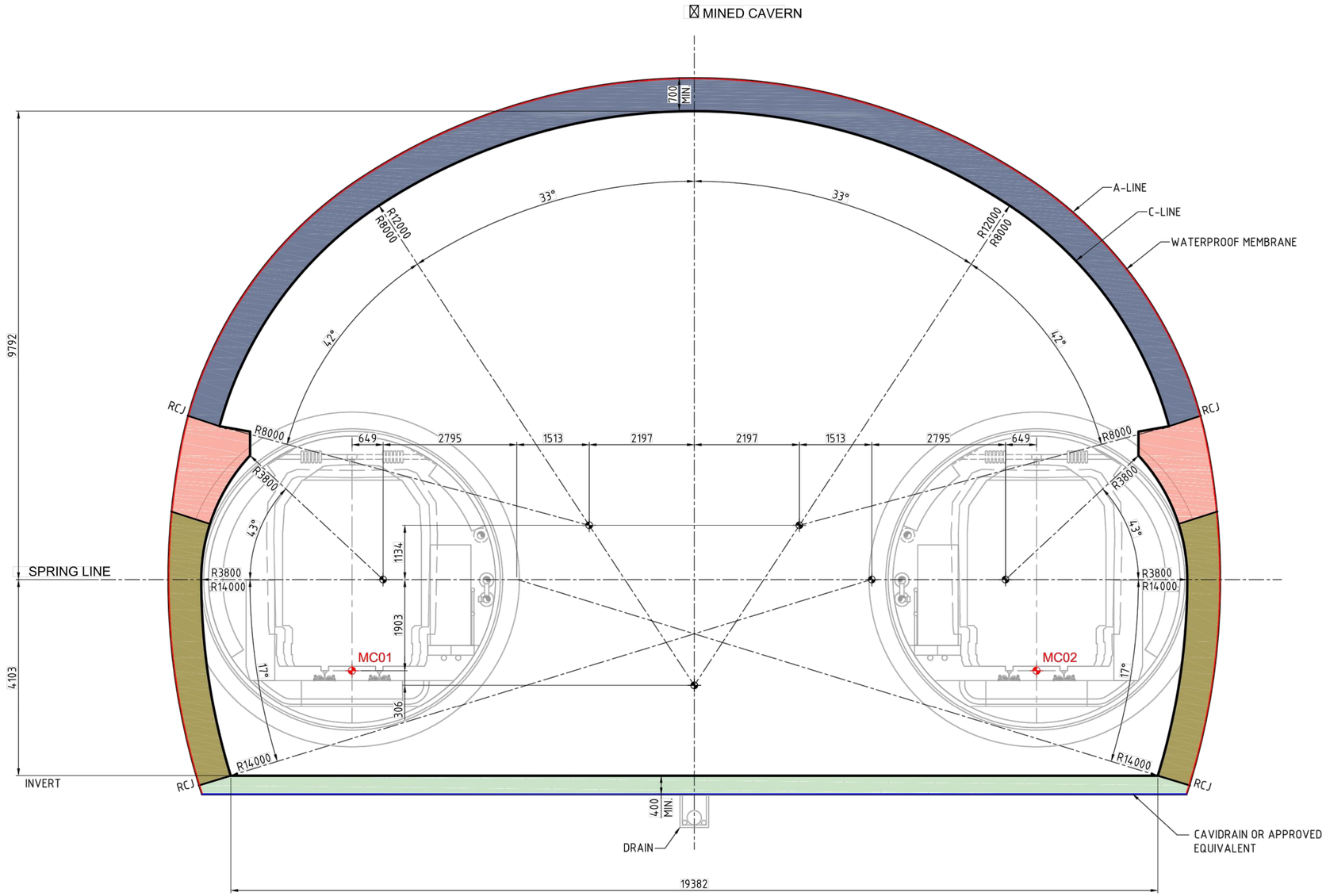

SECTION B 024100
SCALE 1:50

STANDARD CAVERN - C-LINE SETOUT

CRRDA Drg. No. CRR-0003-TUN-GA-122

D	RFPC8 ISSUE		24.07.20	
C	RFPC7 ISSUE		08.05.20	
B	MINOR REVISIONS TO RfPC4 ISSUE		29.04.19	
A	RfPC4 ISSUE		24.04.19	
	Revisions/Descriptions	Certification	Date	Microfiled

CAD FILES

Associated Job Nos

Auxiliary Drg Nos

Survey Data: Datum BCSG02; Horiz. Grid; Height Origin; Survey Books

Scales

Dimensions shown in Millimetres except where shown otherwise

BRISBANE CITY
CROSS RIVER RAIL
CHANGED PROJECT 8

Reference Points: Preceding RP | Dist. to start of job (km) | From start to end of job | From end to Following RP | Following RP

Through Chainage from

WOLLONGABBA ROAD STATION AND PRECINCT
STATION CAVERN C-LINE SETOUT
STANDARD CAVERN

Drawn

Designed

ENGINEERING CERTIFICATION (RPEQ): ENG. AREA | NAME | SIGNATURE | NO. | DATE

CROSSRIVERRAIL

Job No.

Contract. No.

Drawing No. C

Series Number of

MRR_Detail (02/14)

NOT FOR CONSTRUCTION

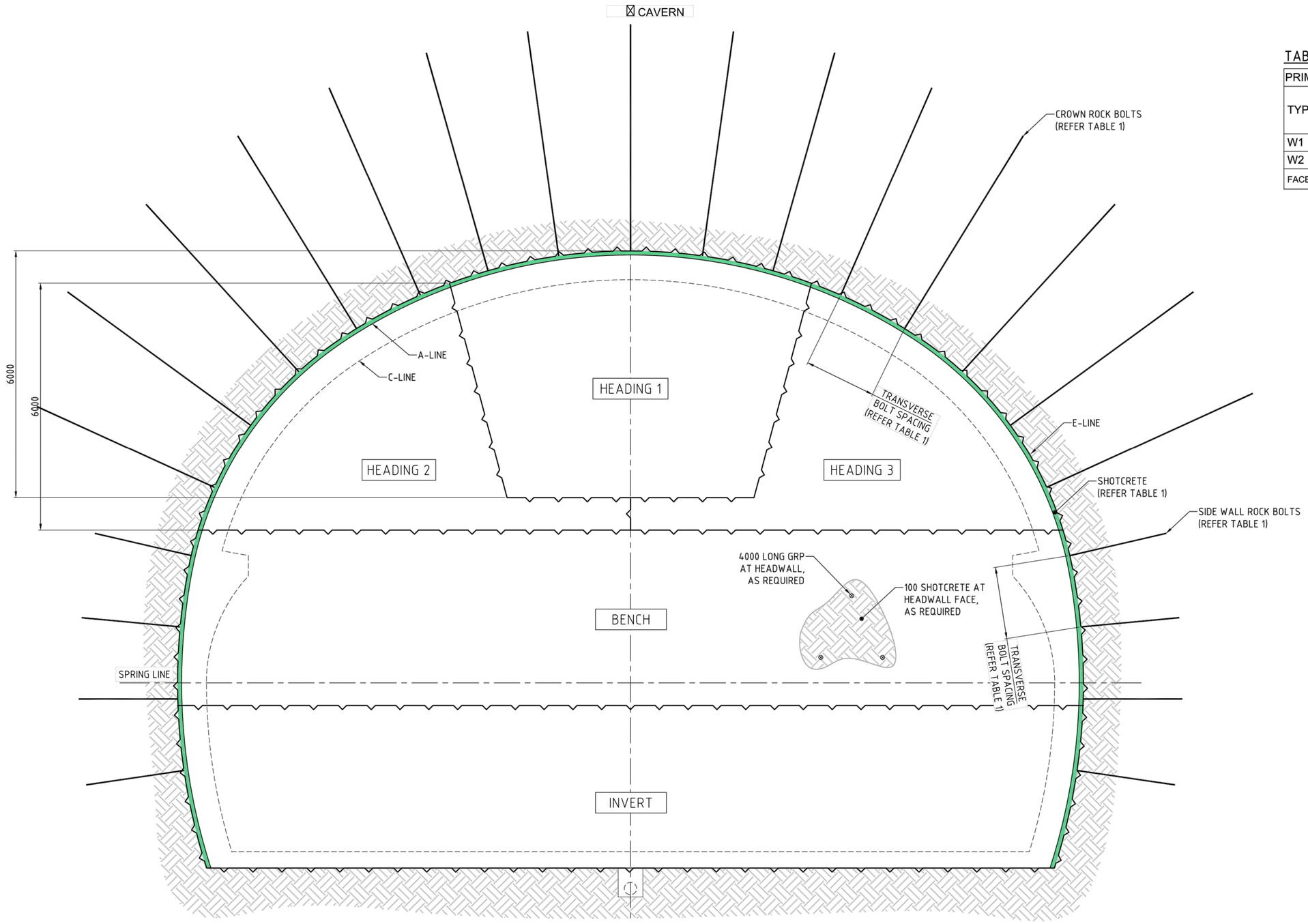

TABLE 1:

PRIMARY SUPPORT				
TYPE	CROWN BOLT LENGTH	SIDE WALL BOLT LENGTH	SPACING	SHOTCRETE THICKNESS
W1	5500	2400	1750	100
W2	5500	2400	1500	250
FACE SUPPORT (GRP DOWELS AND SHOTCRETE) AS REQUIRED				

CAVERN PRIMARY SUPPORT TYPE - W1 AND W2

1 : 50

CRRDA Drg. No. CRR-0003-TUN-GA-123

D	RFPC8 ISSUE		24.07.20	
C	RFPC7 ISSUE		08.05.20	
B	MINOR REVISIONS TO RfPC4 ISSUE		29.04.19	
A	RfPC4 ISSUE		24.04.19	
	Revisions/Descriptions	Certification	Date	Microfiled

CAD FILES

Associated Job Nos

Auxiliary Drg Nos

Survey Data: Datum BCSG02; Horiz. Grid; Height Origin; Survey Books

Scales

Dimensions shown in Millimetres except where shown otherwise

BRISBANE CITY

CROSS RIVER RAIL

CHANGED PROJECT 8

Reference Points

Preceding RP	Dist. to start of job (km)	From start to end of job	From end to Following RP	Following RP

Through Chainage from

WOOLLOONGABBA STATION AND PRECINCT

STATION CAVERN SUPPORT TYPES

Drawn

Designed

ENGINEERING CERTIFICATION (RPEQ)

ENG. AREA	NAME	SIGNATURE	NO.	DATE

CROSSRIVERRAIL

Job No.

Contract. No.

Drawing No. D

Series Number of

MRR_Detail (02/14)

NOT FOR CONSTRUCTION

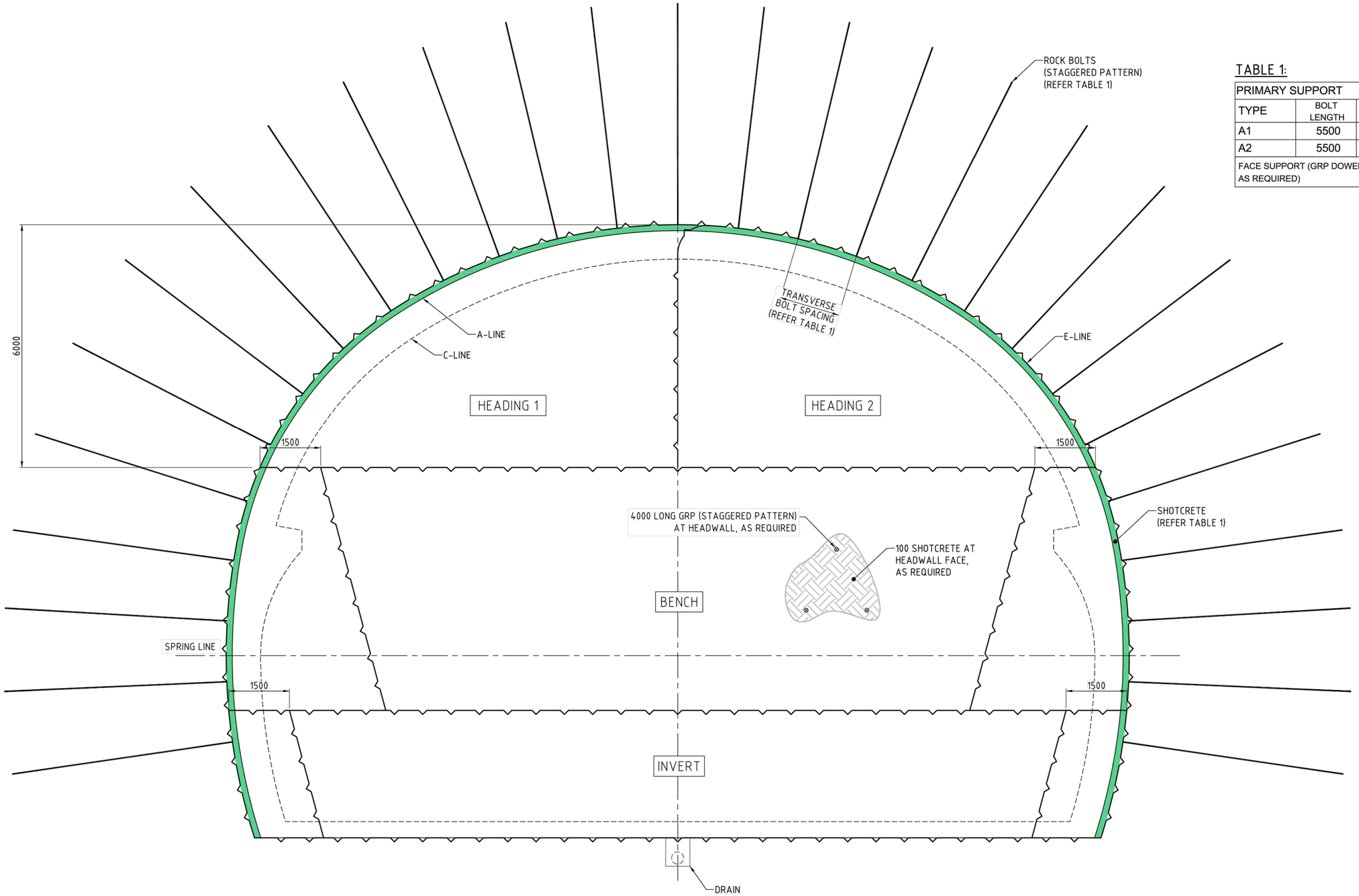

SECTION A 025100
SCALE 1:50

STANDARD CAVERN (ASC1) - SUPPORT TYPE - A1 AND A2

TABLE 1:

PRIMARY SUPPORT			
TYPE	BOLT LENGTH	SPACING	SHOTCRETE THICKNESS
A1	5500	1500	100
A2	5500	1250	150
FACE SUPPORT (GRP DOWELS AND SHOTCRETE AS REQUIRED)			

CRRDA Drg. No. CRR-0003-TUN-GA-124

D	RFPC7 ISSUE		24.07.20	
C	RFPC7 ISSUE		08.05.20	
B	MINOR REVISIONS TO RfPC4 ISSUE		29.04.19	
A	RfPC4 ISSUE		24.04.19	
	Revisions/Descriptions	Certification	Date	Microfiled

CAD FILES

Associated Job Nos

Auxiliary Drg Nos

Survey Data: Datum BCSG02; Horiz. Grid; Height Origin; Survey Books

Scales

Dimensions shown in Millimetres except where shown otherwise

BRISBANE CITY
CROSS RIVER RAIL
CHANGED PROJECT 8

Reference Points: Preceding RP | Dist. to start of job (km) | From start to end of job | From end to Following RP | Following RP

Through Chainage from

ALBERT ST STATION AND PRECINCT
STATION CAVERN SUPPORT TYPE
STANDARD CAVERN – ASC1

Drawn

Designed

ENGINEERING CERTIFICATION (RPEQ): ENG. AREA | NAME | SIGNATURE | NO. | DATE

CROSSRIVERRAIL

Job No.

Contract. No.

Drawing No. D

Series Number of

MRR_Detail (02/14)

NOT FOR CONSTRUCTION

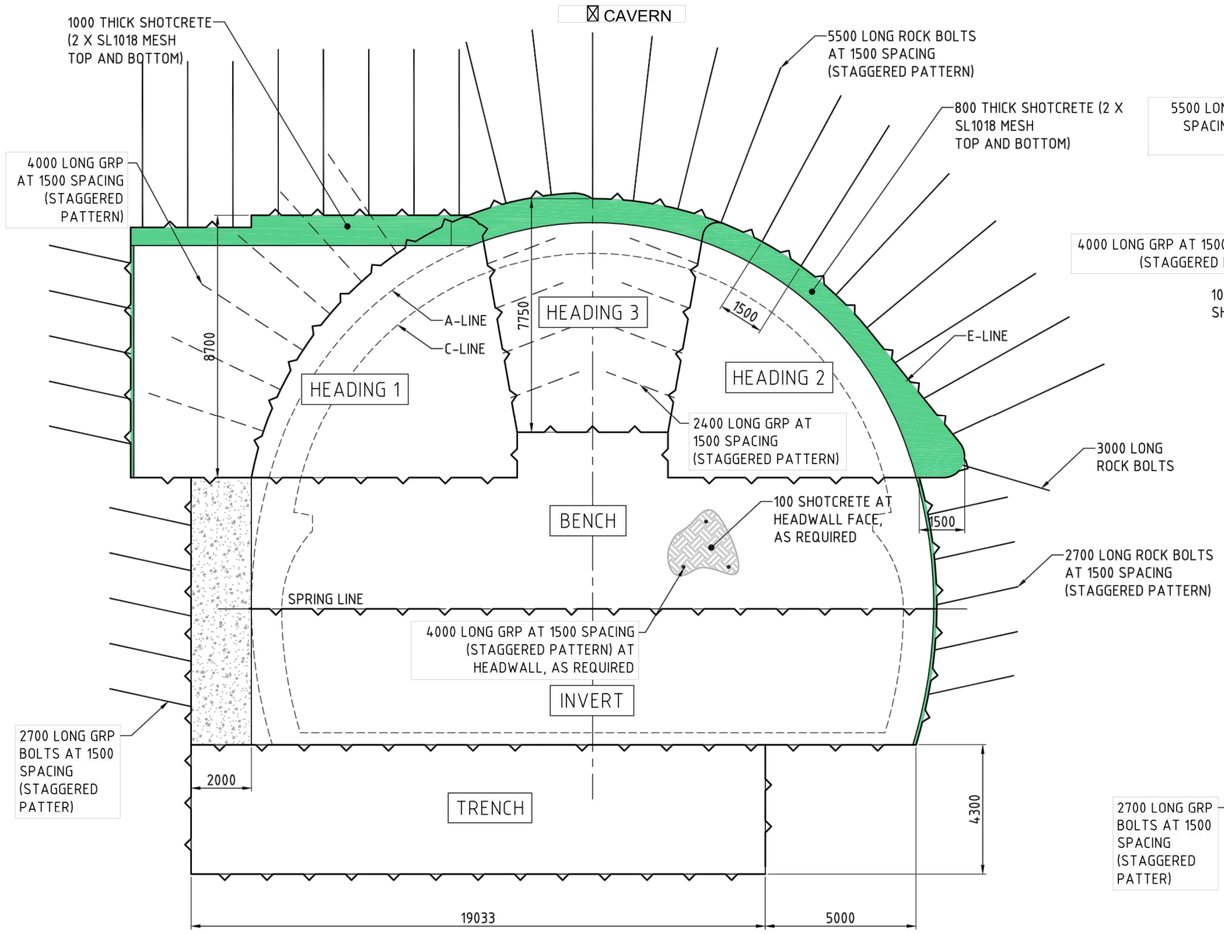

SECTION B 025100
SCALE 1:50

RAISED CAVERN (ARC1) - SUPPORT TYPE-A3

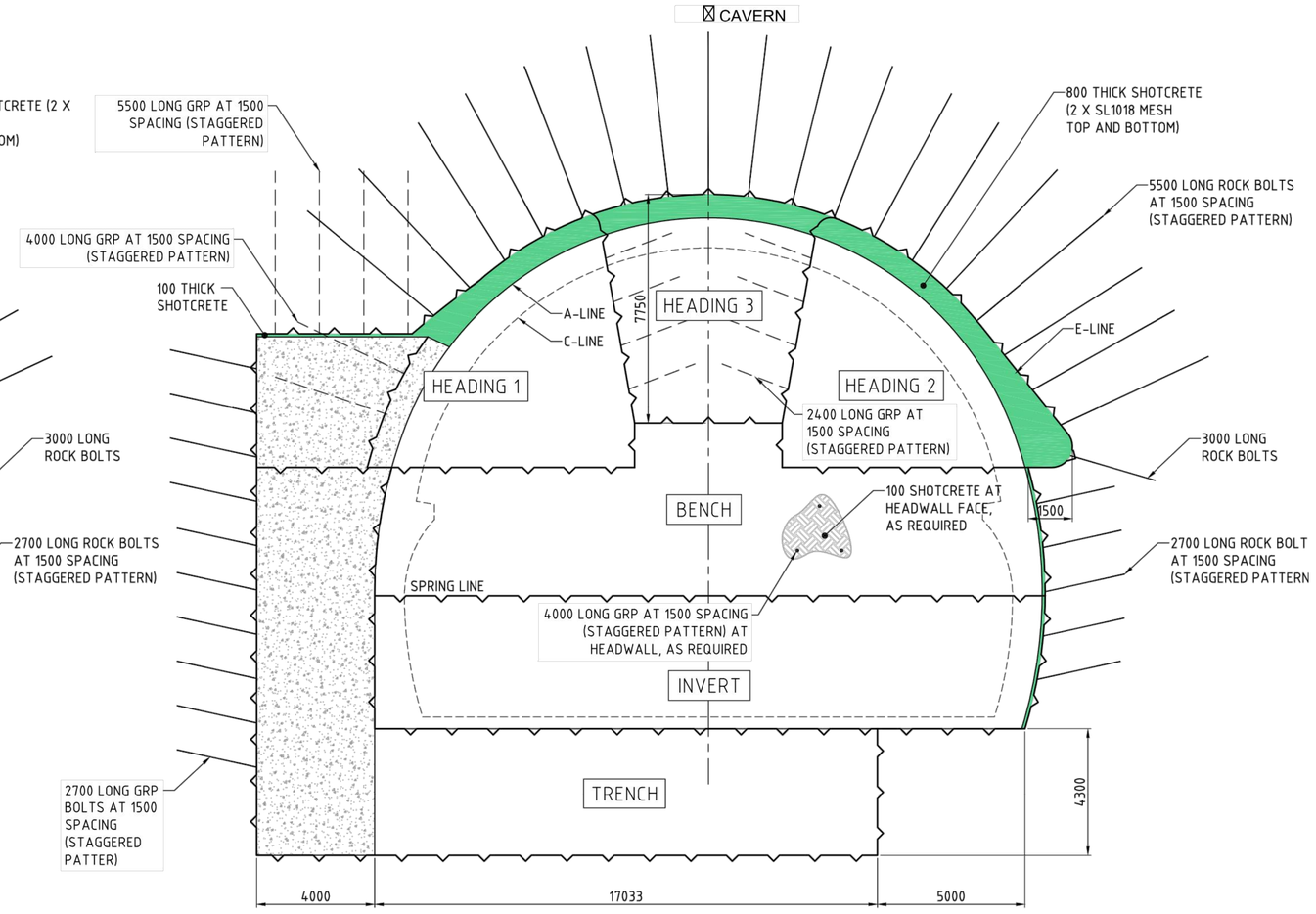

SECTION M 025100
SCALE 1:50

RAISED CAVERN (ARC1) - SUPPORT TYPE-A4

CRRDA Drg. No. CRR-0003-TUN-GA-125

D	RFPC8 ISSUE		24.07.20	
C	RFPC7 ISSUE		08.05.20	
B	MINOR REVISIONS TO RfPC4 ISSUE		29.04.19	
A	RfPC4 ISSUE		24.04.19	
	Revisions/Descriptions	Certification	Date	Microfiled

CAD FILES

Associated Job Nos

Auxiliary Drg Nos

Survey Data: Datum BCSG02; Horiz. Grid; Height Origin; Survey Books

Scales

Dimensions shown in Millimetres except where shown otherwise

BRISBANE CITY
CROSS RIVER RAIL
CHANGED PROJECT 8

Reference Points: Preceding RP | Dist. to start of job (km) | From start to end of job | From end to Following RP | Following RP

Through Chainage from

ALBERT ST STATION AND PRECINCT
STATION CAVERN SUPPORT TYPE
RAISED CAVERN – ARC1

Drawn

Designed

ENGINEERING CERTIFICATION (RPEQ): ENG. AREA | NAME | SIGNATURE | NO. | DATE

CROSSRIVERRAIL

Job No.

Contract. No.

Drawing No. D

Series Number of

MRR_Detail (02/14)

NOT FOR CONSTRUCTION

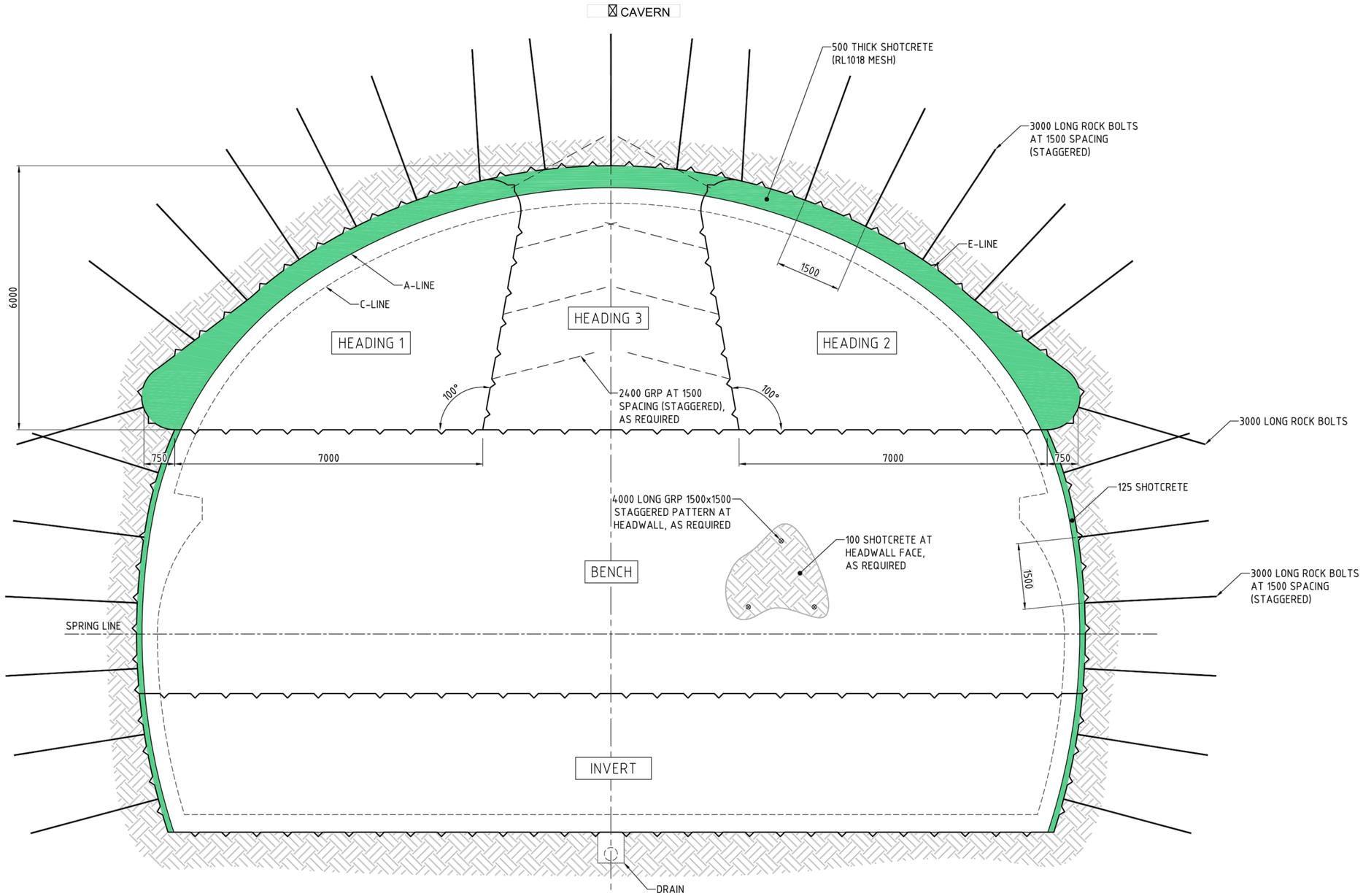

STANDARD CAVERN (RSC1) - SUPPORT TYPE - R1

1 : 50

CRRDA Drg. No. CRR-0003-TUN-GA-126

D	RFPC8 ISSUE		24.07.20	
C	RFPC7 ISSUE		08.05.20	
B	MINOR REVISIONS TO RfPC4 ISSUE		29.04.19	
A	RfPC4 ISSUE		24.04.19	
	Revisions/Descriptions	Certification	Date	Microfiled

CAD FILES

Associated Job Nos

Auxiliary Drg Nos

Survey Data: Datum BCSG02; Horiz. Grid; Height Origin; Survey Books

Scales

Dimensions shown in Millimetres except where shown otherwise

BRISBANE CITY

CROSS RIVER RAIL

CHANGED PROJECT 8

Reference Points

Preceding RP	Dist. to start of job (km)	From start to end of job	From end to Following RP	Following RP

Through Chainage from

ROMA ST STATION AND PRECINCT
STATION CAVERN SUPPORT TYPE
STANDARD CAVERN – RSC1 – SHEET 1

Drawn

Designed

ENGINEERING CERTIFICATION (RPEQ)

ENG. AREA	NAME	SIGNATURE	NO.	DATE

CROSSRIVERRAIL

Job No.

Contract. No.

Drawing No. D

Series Number of

MRR_Detail (02/14)

NOT FOR CONSTRUCTION

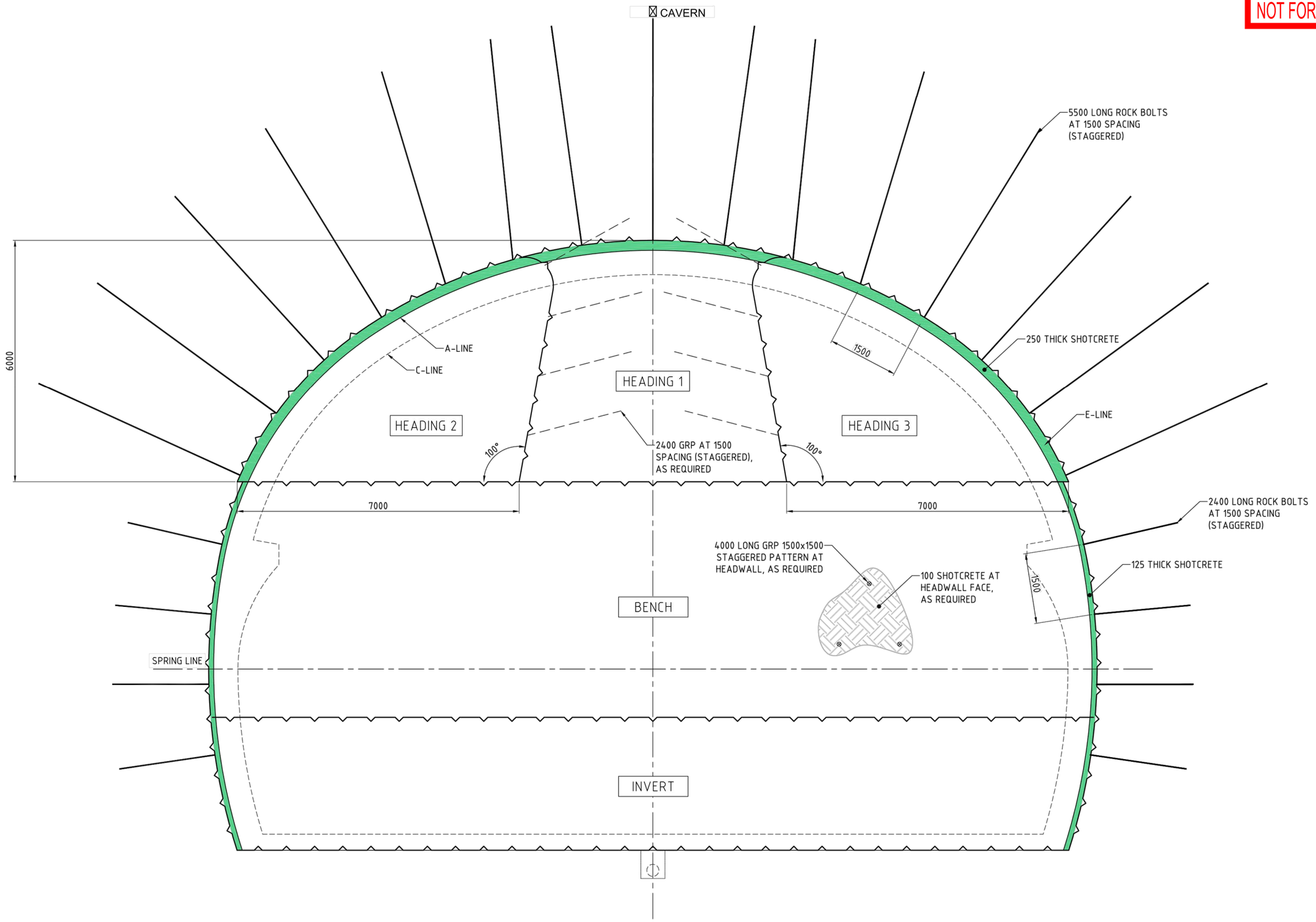

STANDARD CAVERN (RSC1) - SUPPORT TYPE - R2

1 : 50

CRRDA Drg. No. CRR-0003-TUN-GA-127

D	RFPC8 ISSUE		24.07.20	
C	RFPC7 ISSUE		08.05.20	
B	MINOR REVISIONS TO RfPC4 ISSUE		29.04.19	
A	RfPC4 ISSUE		24.04.19	
	Revisions/Descriptions	Certification	Date	Microfiled

CAD FILES

Associated Job Nos

Auxiliary Drg Nos

Survey Data: Datum BCSG02; Horiz. Grid; Height Origin; Survey Books

Scales

Dimensions shown in Millimetres except where shown otherwise

BRISBANE CITY

CROSS RIVER RAIL

CHANGED PROJECT 8

Reference Points

Preceding RP	Dist. to start of job (km)	From start to end of job	From end to Following RP	Following RP

Through Chainage from

ROMA ST STATION AND PRECINCT
STATION CAVERN SUPPORT TYPE
STANDARD CAVERN – RSC1 – SHEET 2

Drawn

Designed

ENGINEERING CERTIFICATION (RPEQ)

ENG. AREA	NAME	SIGNATURE	NO.	DATE

CROSSRIVERRAIL

Job No.

Contract. No.

Drawing No. D

Series Number of

MRR_Detail (02/14)

NOT FOR CONSTRUCTION

LEGEND:

SETOUT POINT

TABLE 1:		
PERMANENT LINING TYPE	PR1	PR2
CROWN THICKNESS	350 MIN.	700 MIN.

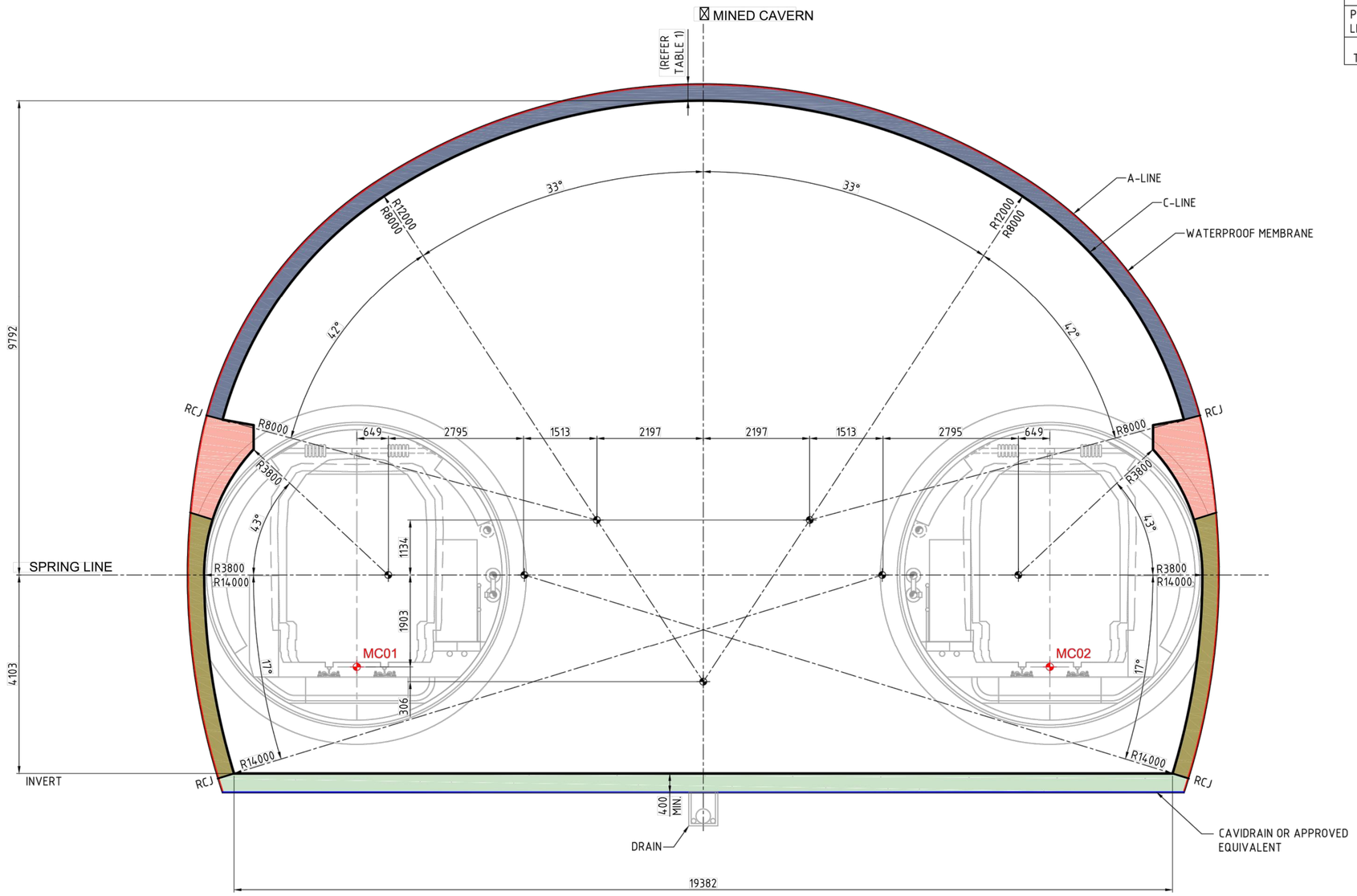

SECTION A 026100
SCALE 1:50

STANDARD CAVERN - RSC1 - C-LINE SETOUT

CRRDA Drg. No. CRR-0003-TUN-GA-128

D	RFPC8 ISSUE		24.07.20	
C	RFPC7 ISSUE		08.05.20	
B	MINOR REVISIONS TO RfPC4 ISSUE		29.04.19	
A	RfPC4 ISSUE		24.04.19	
	Revisions/Descriptions	Certification	Date	Microfiled

CAD FILES

Associated Job Nos

Auxiliary Drg Nos

Survey Data: Datum BCSG02; Horiz. Grid; Height Origin; Survey Books

Scales

Dimensions shown in Millimetres except where shown otherwise

BRISBANE CITY
CROSS RIVER RAIL
CHANGED PROJECT 8

Reference Points: Preceding RP | Dist. to start of job (km) | From start to end of job | From end to Following RP | Following RP

Through Chainage from

ROMA ST STATION AND PRECINCT
STATION CAVERN C-LINE SETOUT
STANDARD CAVERN – RSC1

Drawn

Designed

ENGINEERING CERTIFICATION (RPEQ): ENG. AREA | NAME | SIGNATURE | NO. | DATE

CROSSRIVERRAIL

Job No.

Contract. No.

Drawing No. D

Series Number of

MRR_Detail (02/14)

NOT FOR CONSTRUCTION

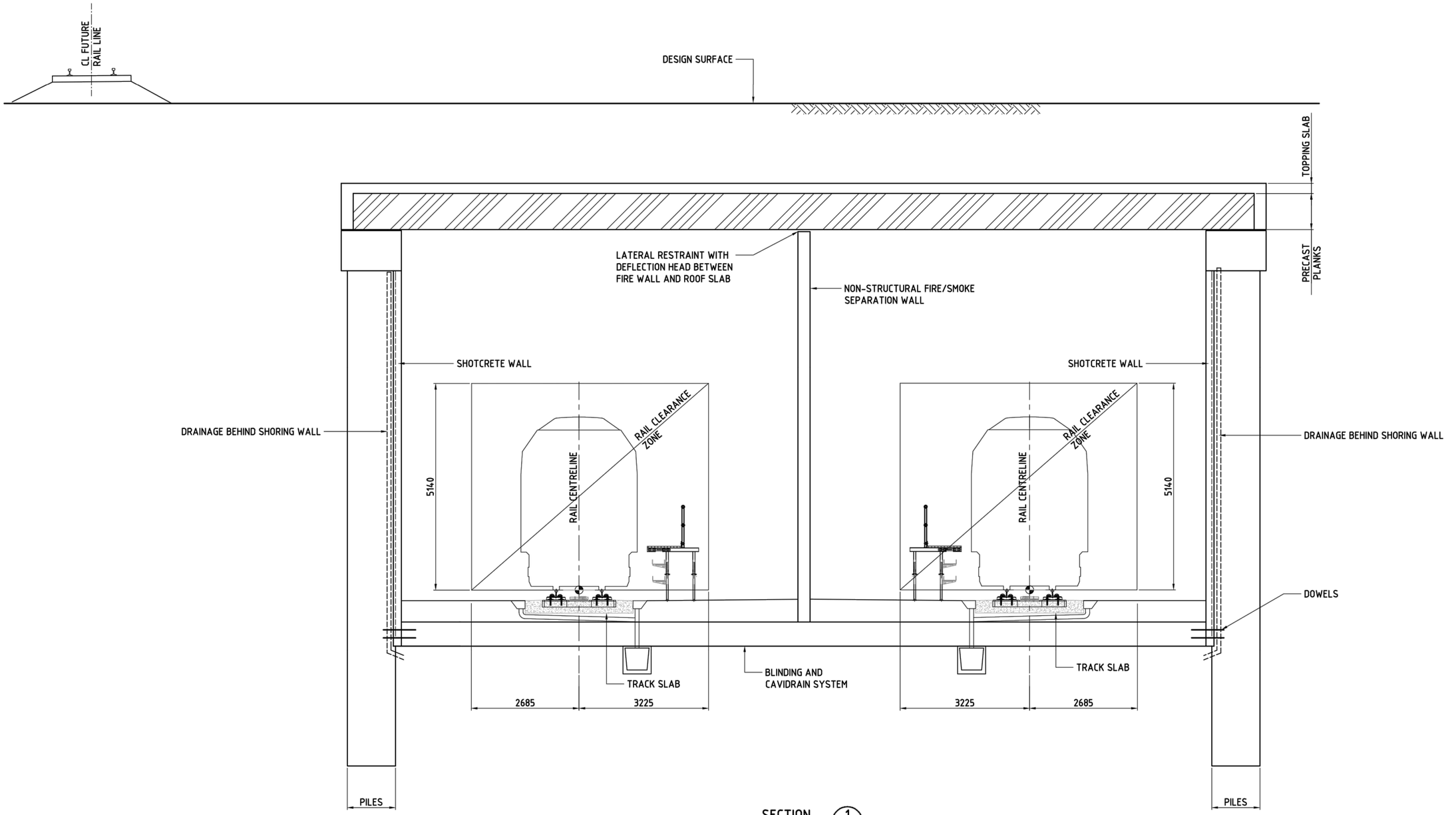

SECTION 1 (041527)
SCALE 1:50

CRRDA Drg. No. CRR-0003-POR-GA-110

D	RFPC8 ISSUE		24.07.20	
C	RFPC7 ISSUE		08.05.20	
B	MINOR REVISIONS TO RfPC4 ISSUE		29.04.19	
A	RfPC4 ISSUE		24.04.19	
	Revisions/Descriptions	Certification	Date	Microfiled

CAD FILES

Associated Job Nos

Auxiliary Drg Nos

Survey Data	
Datum	BCSG02
Horiz. Grid	
Height Origin	
Survey Books	

Scales

Dimensions shown in Millimetres except where shown otherwise

BRISBANE CITY
CROSS RIVER RAIL
CHANGED PROJECT 8

Reference Points

Preceding RP	Dist. to start of job (km)	From start to end of job	From end to Following RP	Following RP

Through Chainage from

NORTH PORTAL CROSS SECTIONS
SHEET 1

Drawn

Designed

ENGINEERING CERTIFICATION (RPEQ)

ENG. AREA	NAME	SIGNATURE	NO.	DATE

CROSSRIVERRAIL

Job No.
Contract. No.
Drawing No. D
Series Number of

MRR_Detail (02/14)

NOT FOR CONSTRUCTION

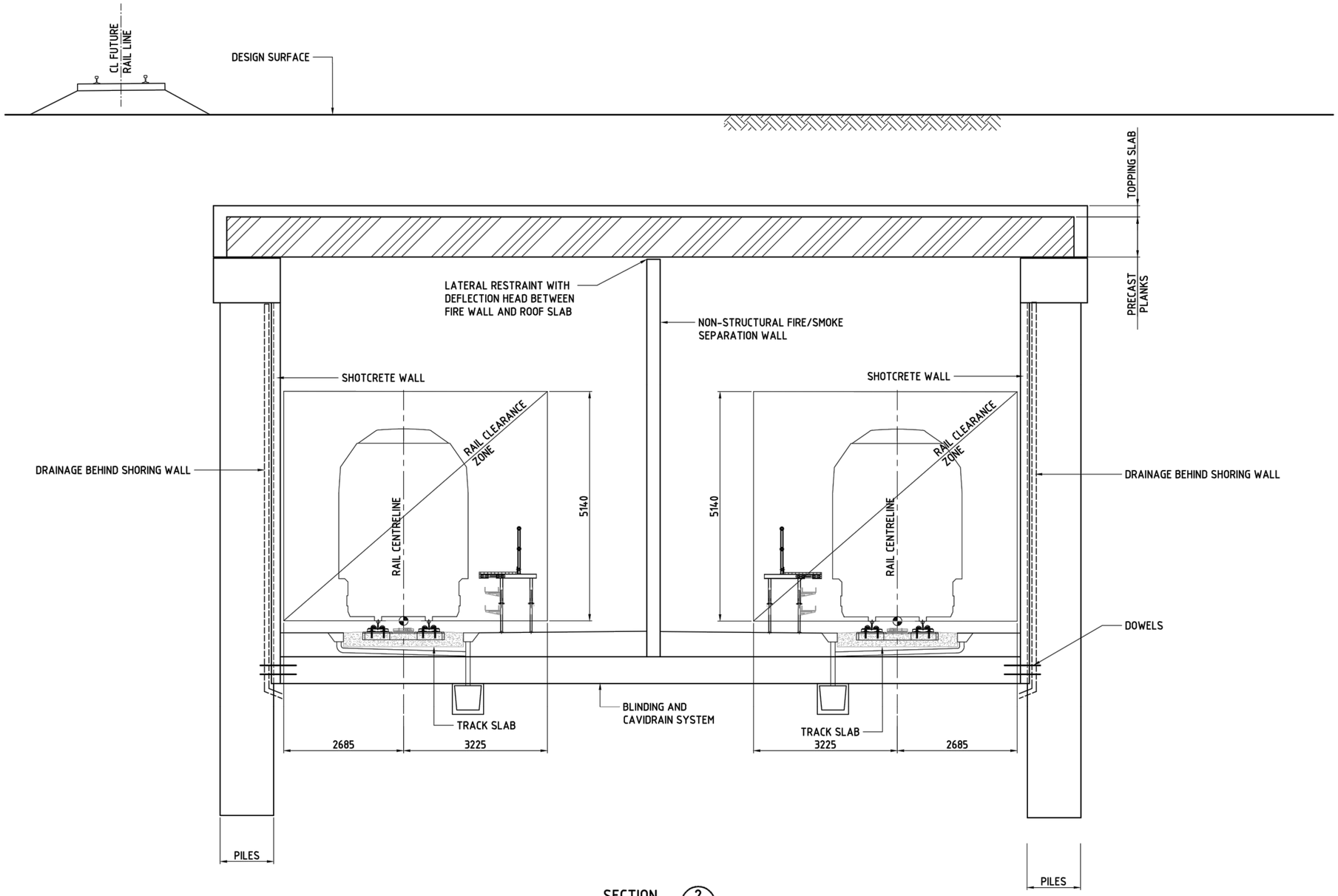

SECTION 2 (041521)
SCALE 1:50

CRRDA Drg. No. CRR-0003-POR-GA-111

D	RFPC8 ISSUE		24.07.20	
C	RFPC7 ISSUE		08.05.20	
B	MINOR REVISIONS TO RfPC4 ISSUE		29.04.19	
A	RfPC4 ISSUE		24.04.19	
	Revisions/Descriptions	Certification	Date	Microfiled

CAD FILES

Associated Job Nos

Auxiliary Drg Nos

Survey Data: Datum BCSG02; Horiz. Grid; Height Origin; Survey Books

Scales

Dimensions shown in Millimetres except where shown otherwise

BRISBANE CITY
CROSS RIVER RAIL
CHANGED PROJECT 8

Reference Points

Preceding RP	Dist. to start of job (km)	From start to end of job	From end to Following RP	Following RP

Through Chainage from

NORTH PORTAL CROSS SECTIONS
SHEET 2

Drawn
Designed

ENGINEERING CERTIFICATION (RPEQ)

ENG. AREA	NAME	SIGNATURE	NO.	DATE

CROSSRIVERRAIL

Job No.
Contract. No.
Drawing No. D
Series Number of

MRR_Detail (02/14)

NOT FOR CONSTRUCTION

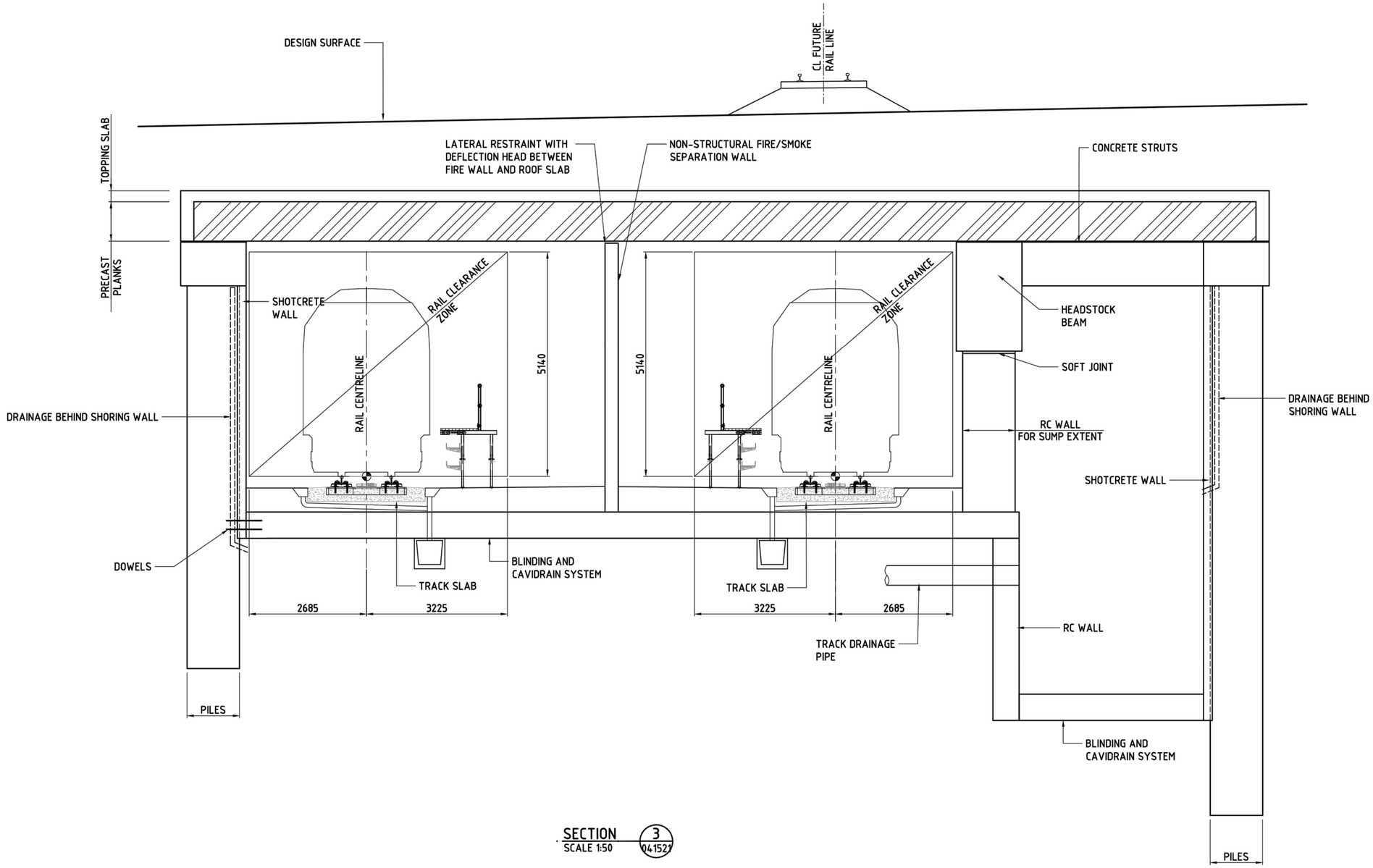

SECTION 3 (04152)
SCALE 1:50

CRRDA Drg. No. CRR-0003-POR-GA-112

D	RFPC8 ISSUE		24.07.20	
C	RFPC7 ISSUE		08.05.20	
B	MINOR REVISIONS TO RfPC4 ISSUE		29.04.19	
A	RfPC4 ISSUE		24.04.19	
	Revisions/Descriptions	Certification	Date	Microfiled

CAD FILES

Associated Job Nos

Auxiliary Drg Nos

Survey Data: Datum BCSG02; Horiz. Grid; Height Origin; Survey Books

Scales

Dimensions shown in Millimetres except where shown otherwise

BRISBANE CITY
CROSS RIVER RAIL
CHANGED PROJECT 8

Reference Points: Preceding RP | Dist. to start of job (km) | From start to end of job | From end to Following RP | Following RP

Through Chainage from

NORTH PORTAL CROSS SECTIONS
SHEET 3

Drawn

Designed

ENGINEERING CERTIFICATION (RPEQ): ENG. AREA | NAME | SIGNATURE | NO. | DATE

CROSSRIVERRAIL

Job No.

Contract. No.

Drawing No. D

Series Number of

MRR_Detail (02/14)

NOT FOR CONSTRUCTION

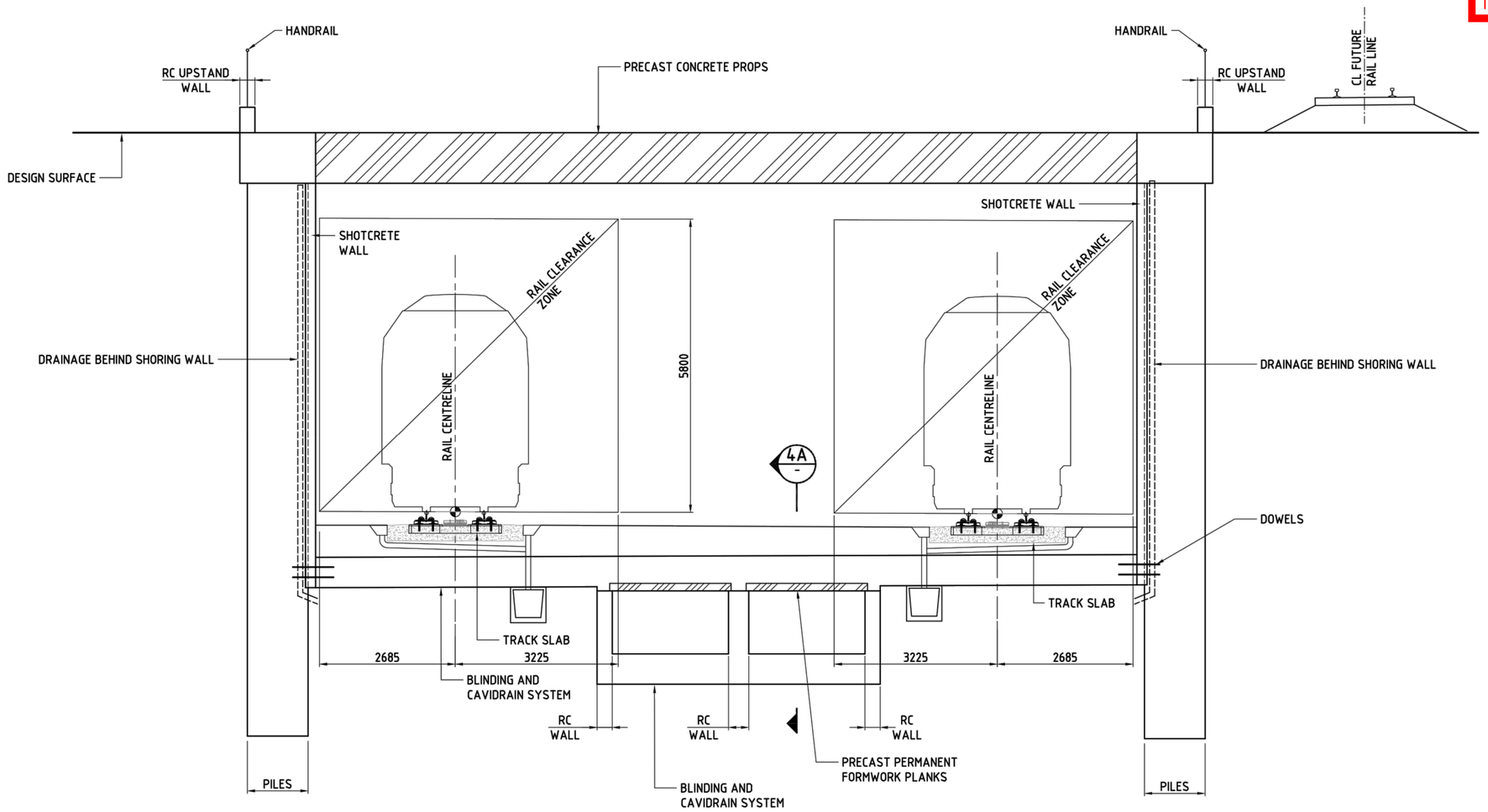

SECTION 4 (041521)
SCALE 1:50

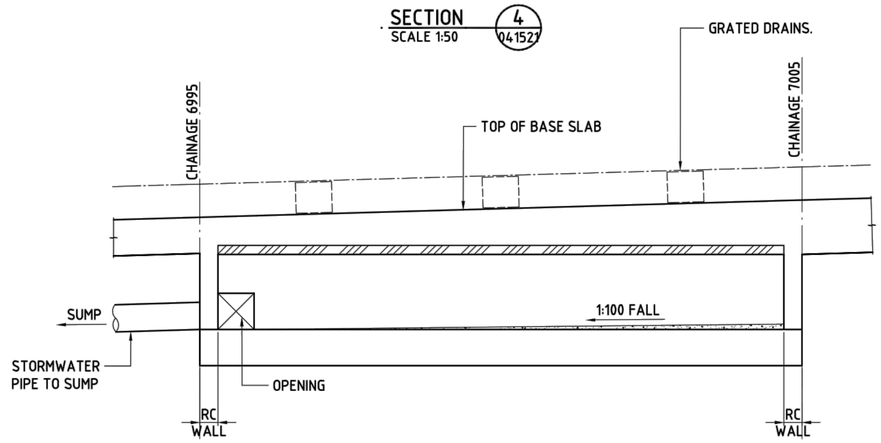

SECTION 4A (-)
SCALE 1:50

CRRDA Drg. No. CRR–0003–POR–GA–113

D	RFPC7 ISSUE		24.07.20	
C	RFPC7 ISSUE		08.05.20	
B	MINOR REVISIONS TO RfPC4 ISSUE		29.04.19	
A	RfPC4 ISSUE		24.04.19	
	Revisions/Descriptions	Certification	Date	Microfiled

CAD FILES

Associated Job Nos

Auxiliary Drg Nos

Survey Data: Datum BCSG02; Horiz. Grid; Height Origin; Survey Books

Scales

Dimensions shown in Millimetres except where shown otherwise

BRISBANE CITY
CROSS RIVER RAIL
CHANGED PROJECT 8

Reference Points: Preceding RP | Dist. to start of job (km) | From start to end of job | From end to Following RP | Following RP

Through Chainage from

NORTH PORTAL CROSS SECTIONS
SHEET 4

Drawn

Designed

ENGINEERING CERTIFICATION (RPEQ): ENG. AREA | NAME | SIGNATURE | NO. | DATE

CROSSRIVERRAIL

Job No.

Contract. No.

Drawing No. D

Series Number of

MRR_Detail (02/14)

NOT FOR CONSTRUCTION

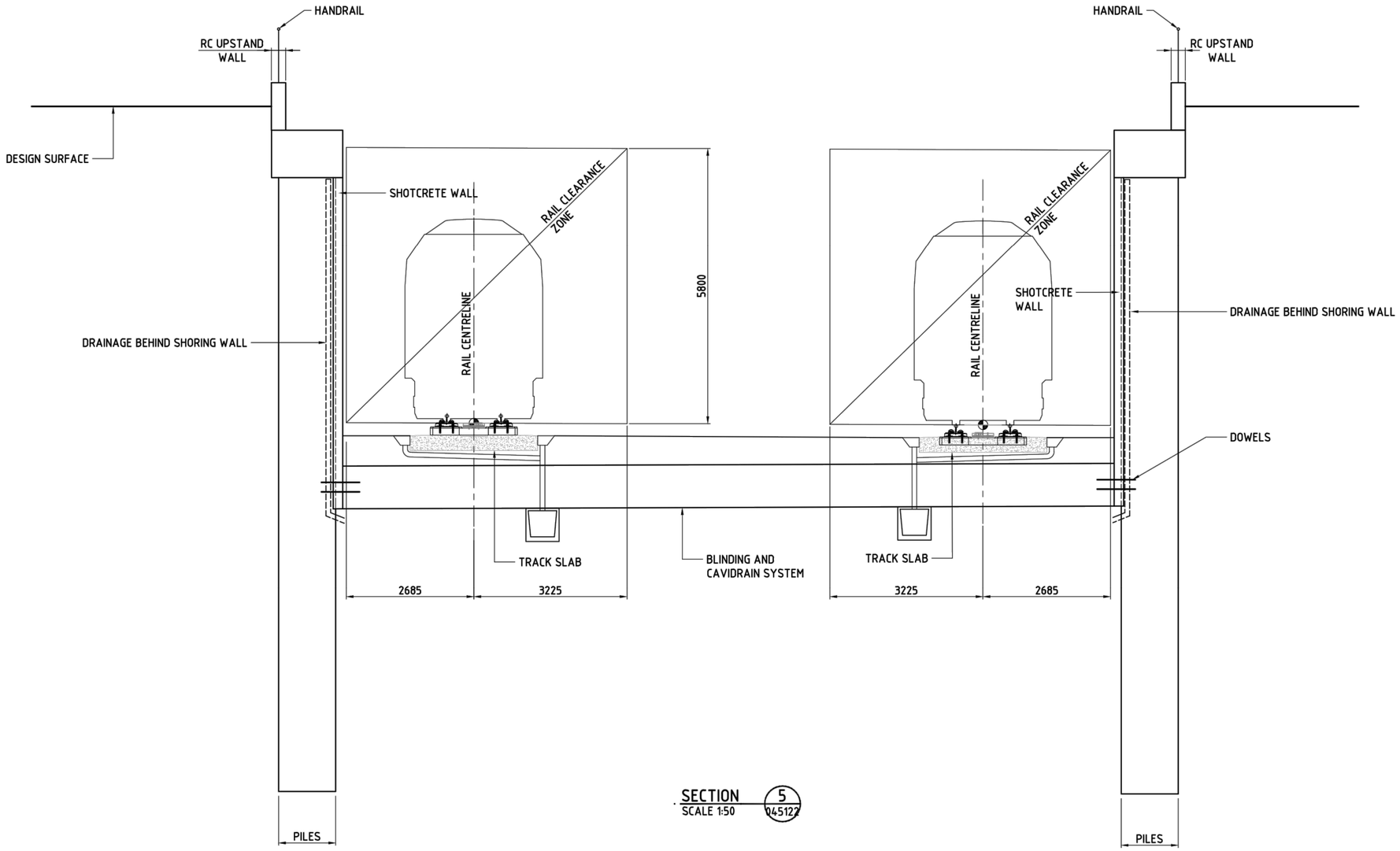

SECTION 5
SCALE 1:50
045122

CRRDA Drg. No. CRR-0003-POR-GA-114

D	RFPC8 ISSUE		24.07.20	
C	RFPC7 ISSUE		08.05.20	
B	MINOR REVISIONS TO RfPC4 ISSUE		29.04.19	
A	RfPC4 ISSUE		24.04.19	
	Revisions/Descriptions	Certification	Date	Microfiled

CAD FILES

Associated Job Nos

Auxiliary Drg Nos

Survey Data: Datum BCSG02; Horiz. Grid; Height Origin; Survey Books

Scales

Dimensions shown in Millimetres except where shown otherwise

BRISBANE CITY
CROSS RIVER RAIL
CHANGED PROJECT 8

Reference Points

Preceding RP	Dist. to start of job (km)	From start to end of job	From end to Following RP	Following RP

Through Chainage from

NORTH PORTAL CROSS SECTIONS
SHEET 5

Drawn

Designed

ENGINEERING CERTIFICATION (RPEQ)

ENG. AREA	NAME	SIGNATURE	NO.	DATE

CROSSRIVERRAIL

Job No.
Contract. No.
Drawing No. D
Series Number of

MRR_Detail (02/14)

NOT FOR CONSTRUCTION

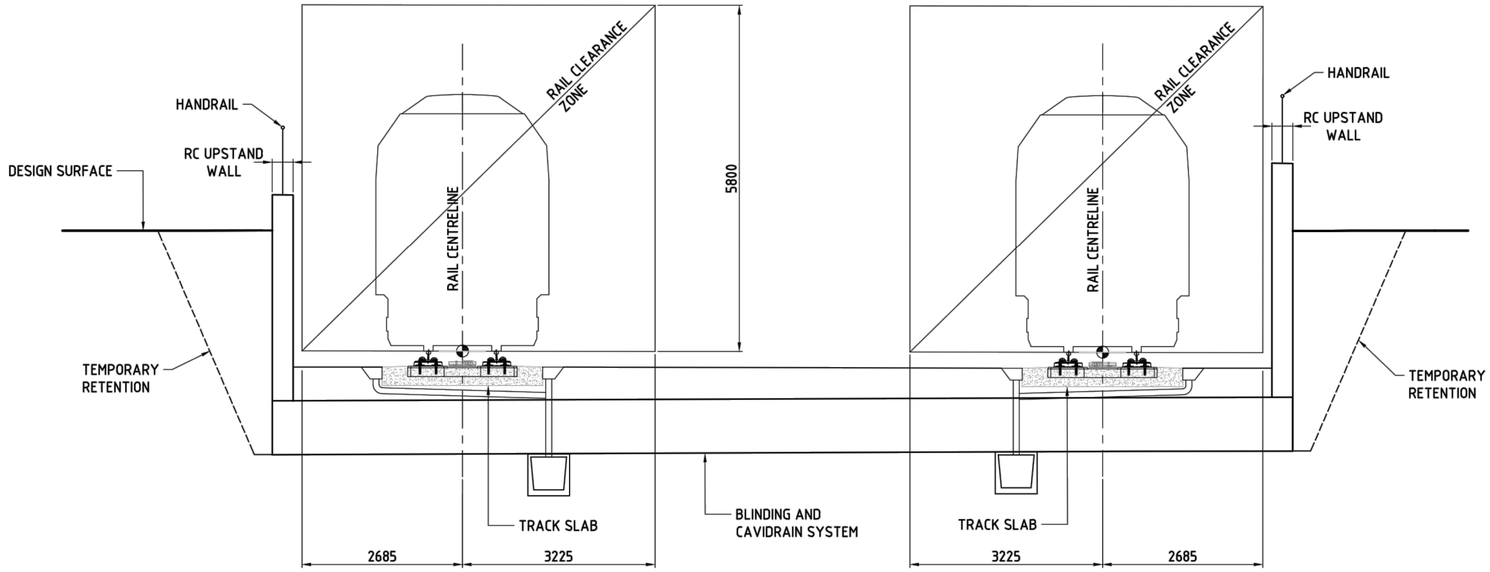

SECTION 6
SCALE 1:50 041522

CRRDA Drg. No. CRR-0003-POR-GA-115

D	RFPC8 ISSUE		24.07.20	
C	RFPC7 ISSUE		08.05.20	
B	MINOR REVISIONS TO RfPC4 ISSUE		29.04.19	
A	RfPC4 ISSUE		24.04.19	
	Revisions/Descriptions	Certification	Date	Microfiled

CAD FILES

Associated Job Nos

Auxiliary Drg Nos

Survey Data	
Datum	BCSG02
Horiz. Grid	
Height Origin	
Survey Books	

Scales

Dimensions shown in Millimetres except where shown otherwise

BRISBANE CITY
CROSS RIVER RAIL
CHANGED PROJECT 8

Reference Points

Preceding RP	Dist. to start of job (km)	From start to end of job	From end to Following RP	Following RP

Through Chainage from

NORTH PORTAL CROSS SECTIONS
SHEET 6

Drawn

Designed

ENGINEERING CERTIFICATION (RPEQ)

ENG. AREA	NAME	SIGNATURE	NO.	DATE

CROSSRIVERRAIL

Job No.	
Contract. No.	
Drawing No.	D
Series Number	of

MRR_Detail (02/14)

NOT FOR CONSTRUCTION

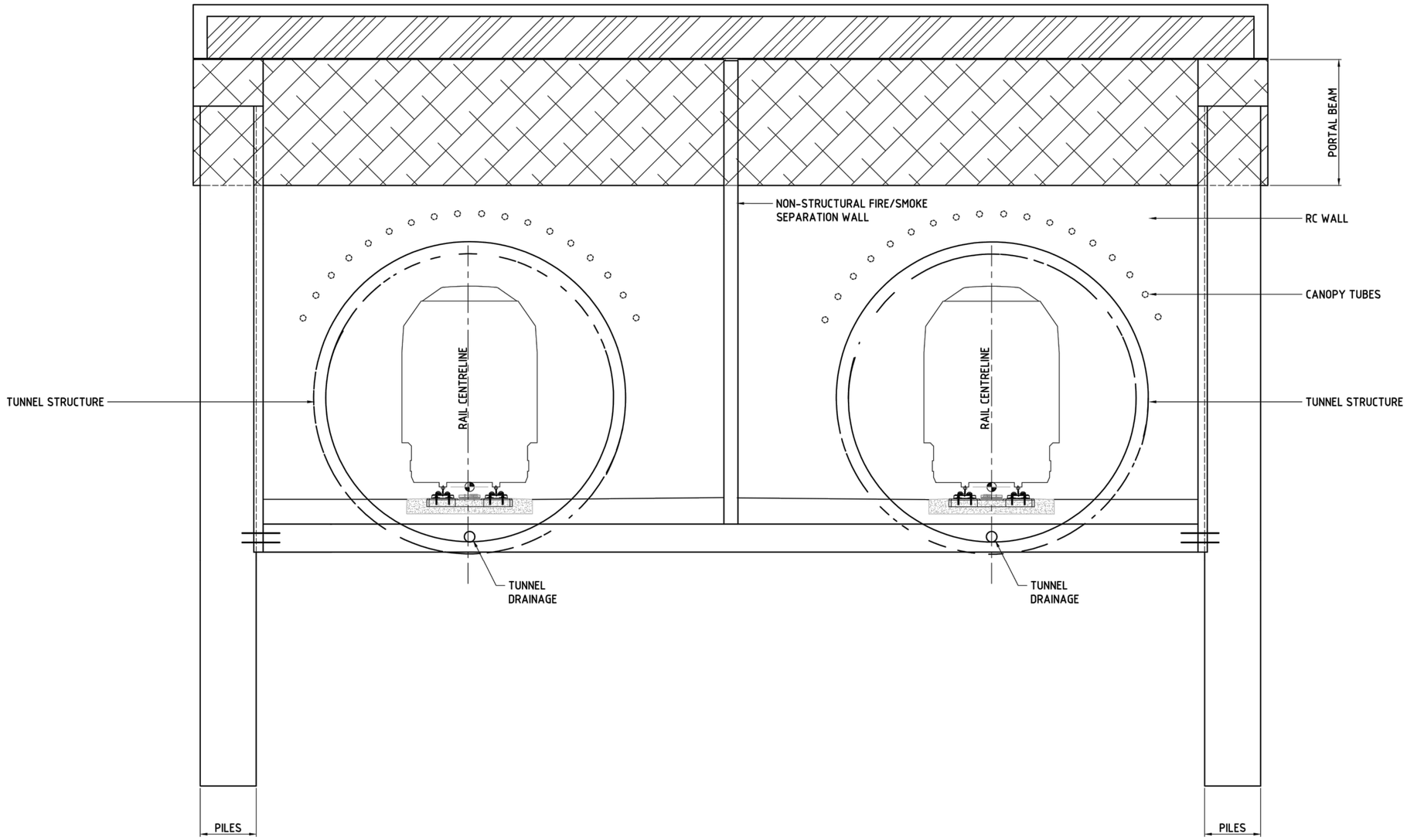

CRRDA Drg. No. CRR-0003-POR-GA-116

D	RFPC8 ISSUE		24.07.20	
C	RFPC7 ISSUE		08.05.20	
B	MINOR REVISIONS TO RfPC4 ISSUE		29.04.19	
A	RfPC4 ISSUE		24.04.19	
	Revisions/Descriptions	Certification	Date	Microfiled

CAD FILES

Associated Job Nos

Auxiliary Drg Nos

Survey Data: Datum BCSG02; Horiz. Grid; Height Origin; Survey Books

Scales

Dimensions shown in Millimetres except where shown otherwise

BRISBANE CITY
CROSS RIVER RAIL
CHANGED PROJECT 8

Reference Points: Preceding RP | Dist. to start of job (km) | From start to end of job | From end to Following RP | Following RP

Through Chainage from

NORTH PORTAL CROSS SECTIONS SHEET 7

Drawn

Designed

ENGINEERING CERTIFICATION (RPEQ): ENG. AREA | NAME | SIGNATURE | NO. | DATE

CROSSRIVERRAIL

Job No.

Contract. No.

Drawing No. D

Series Number of

MRR_Detail (02/14)